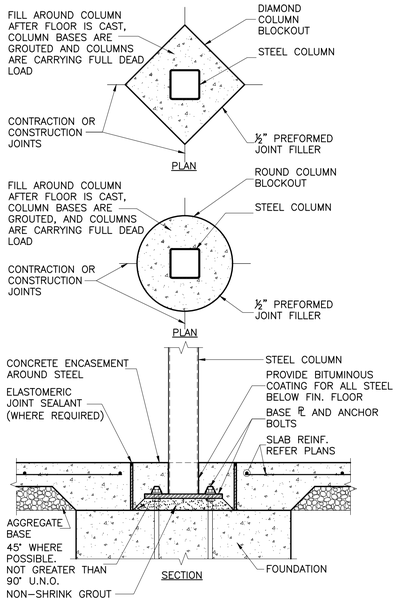

1 TYP. ISOLATION JOINT DETAILS

SCALE: NONE

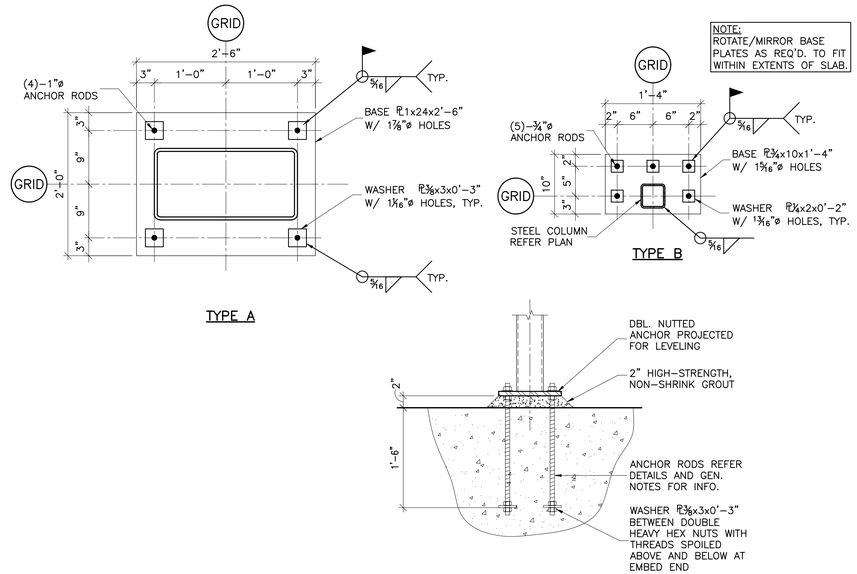

2 BASE PLATE DETAILS

SCALE: NONE

¾"ø A325-N BOLT SCHEDULE FOR SINGLE PLATE SHEAR TAB CONNECTIONS (FACTORED LOADS)	
END REACTION	NO. OF BOLTS
0 THRU 31 KIPS	2-¾ø
31 THRU 47 KIPS	3-¾ø
47 THRU 63 KIPS	4-¾ø
63 THRU 79 KIPS	5-¾ø
79 THRU 95 KIPS	6-¾ø
95 THRU 111 KIPS	7-¾ø
111 THRU 127 KIPS	8-¾ø

NOTES:
1. VALUES SHOWN ARE APPLICABLE FOR SINGLE PLATE SHEAR TAB CONNECTIONS
2. SEE PLAN FOR END REACTIONS
3. L = PLATE LENGTH ≥ T/2 OF CONNECTED BEAM.
4. AT HSS OR PIPE COLUMNS, A THROUGH-PLATE WITH EQUAL WELD ON THE BACK SIDE OF THE COLUMN IS REQUIRED UNDER EITHER OF THE FOLLOWING CIRCUMSTANCES:

A. FOR SQUARE OR RECTANGULAR HSS:

$$\text{WHEN } \frac{B-2.79t}{0.93t} > 35.1$$

B. FOR ROUND HSS OR PIPE:

$$\text{WHEN } \frac{D}{t} > \frac{3.190}{Fy}$$

WHERE:
B = NOMINAL COLUMN WIDTH ACROSS THE COLUMN FACE WITH THE SINGLE PLATE CONNECTION, IN.
D = OUTSIDE DIAMETER OF ROUND HSS OR PIPE, IN.
t = NOMINAL THICKNESS OF COLUMN,IN.
Fy = YIELD STRENGTH OF COLUMN, KSI

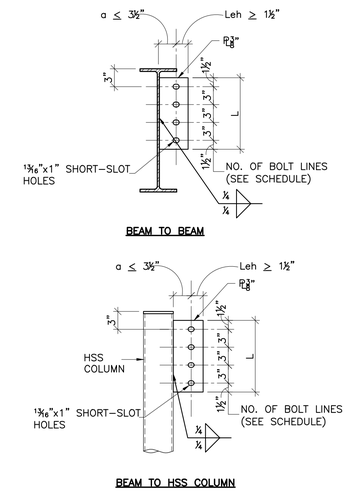

3 SINGLE PLATE SHEAR TAB CONNECTIONS (LRFD)

SCALE: NONE

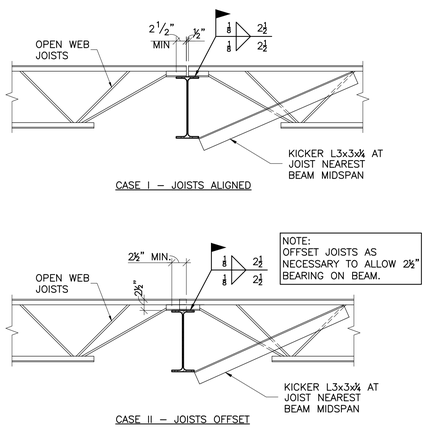

4 KICKER ANGLE AT BOTTOM FLANGE

SCALE: NONE

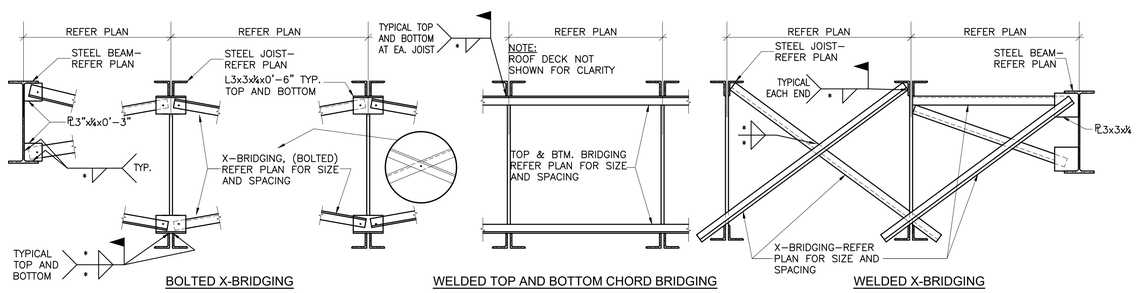

*WELD AS REQUIRED BY JOIST MANUFACTURER

5 TYP. BRIDGING DETAILS AT JOISTS

SCALE: NONE

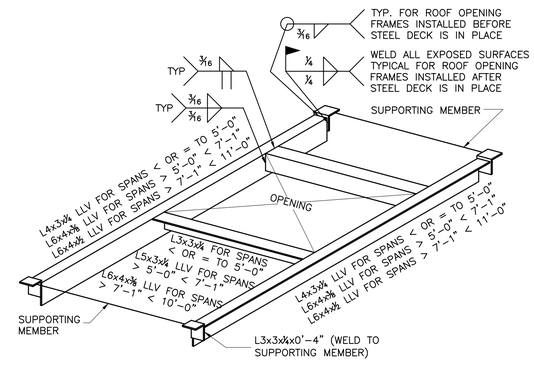

6 TYP. ROOF OPENING FRAME AND MECHANICAL UNIT SUPPORT

SCALE: NONE

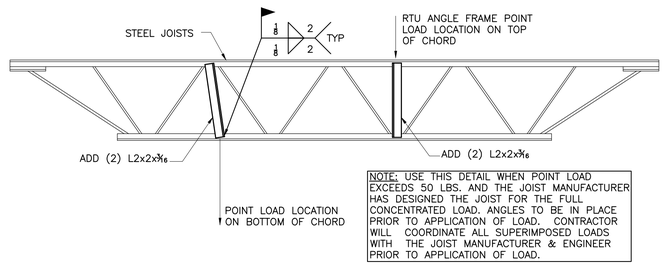

7 BRACING DETAIL FOR STEEL JOISTS W/ POINT LOADS

SCALE: NONE

AGP
the Abla Griffin Partnership L.L.C.
313 S. E. 5th Street
MOORE, OK. 73160
405.735.3477
AGP@theAGP.net
www.theAGP.net

CEDAR CREEK
CIVIL

KFC ENGINEERING
STRUCTURAL

SALAS O'BRIEN
MECHANICAL / ELECTRICAL

PROFESSIONAL STRUCTURAL ENGINEER BRANDON W. BIRCH 26145 OKLAHOMA
04/01/2026

CC
drawn by

BB
checked by

AUGUST 2025
date

revisions

MOORE PUBLIC SCHOOLS

WESTMOORE HIGH SCHOOL ENTRY UPGRADES

sheet no:

S106

KFC engineering
Kirkpatrick Forest Curtis PC
Structural Engineering
OK CA #3888, EXP. 06/30/27
1300 N. Walker, Suite 200
Oklahoma City, OK 73103
405.528.4596 | kfcengr.com

OWNERSHIP USE OF DOCUMENTS:

AGP EXPRESSLY RESERVES ITS COPYRIGHT AND OTHER PROPERTY RIGHTS OF ALL PLANS AND DRAWINGS DESIGNED AND/OR PRODUCED. PLANS AND DRAWINGS ARE NOT TO BE REPRODUCED IN ANY FORM OR MANNER WITHOUT THE EXPRESSED WRITTEN CONSENT OF AGP.