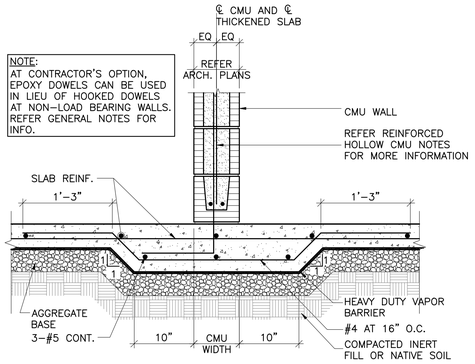

NOTE:
AT CONTRACTOR'S OPTION, EPOXY DOWELS CAN BE USED IN LIEU OF HOOKED DOWELS AT NON-LOAD BEARING WALLS. REFER GENERAL NOTES FOR INFO.

1 THICKENED SLAB AT CMU
SCALE: NONE

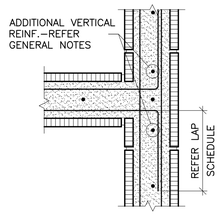

2 DETAIL AT BOND BEAM CORNER W/ NO CONTROL JT
SCALE: NONE

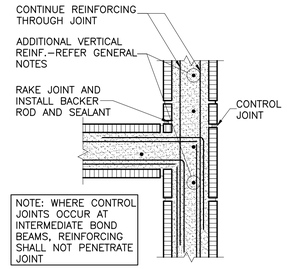

NOTE: WHERE CONTROL JOINTS OCCUR AT INTERMEDIATE BOND BEAMS, REINFORCING SHALL NOT PENETRATE JOINT

3 DETAIL AT FLOOR/ROOF BOND BEAM CORNER W/ CONTROL JT
SCALE: NONE

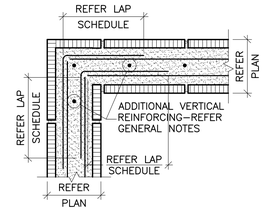

4 CORNER BOND BEAM WITH NO CONTROL JT
SCALE: NONE

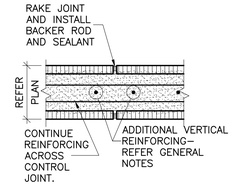

NOTE: BOND BEAM CONTROL JOINT TO ALIGN WITH WALL CONTROL JOINT.

5 CONTROL JT AT FLOOR/ROOF BOND BEAM
SCALE: NONE

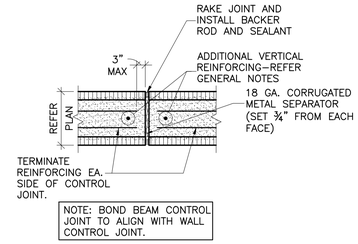

NOTE: BOND BEAM CONTROL JOINT TO ALIGN WITH WALL CONTROL JOINT.

6 CONTROL JT AT INTERMEDIATE BOND BEAM
SCALE: NONE

BAR SIZE	LENGTH (in.) CENTER 6" CMU	CENTER 8" CMU	CENTER 12" CMU	EDGE (2 IN CLEAR COVER) 6", 8", 12" CMU
3	1'-0"	1'-0"	1'-0"	1'-6"
4	1'-6"	1'-6"	1'-0"	2'-0"
5	2'-6"	2'-0"	1'-6"	3'-0"
6	**	3'-6"	2'-0"	**
7	**	**	3'-0"	**
8	**	**	**	**

7 CMU REINFORCING LAP SCHEDULE
SCALE: NONE

NOTES:
1. f'm= 2000 psi
2. fy= 60,000 psi
*SCHEDULE ALSO APPLIES TO EMBEDMENT LENGTHS
**MECHANICAL SPLICES SHALL BE USED

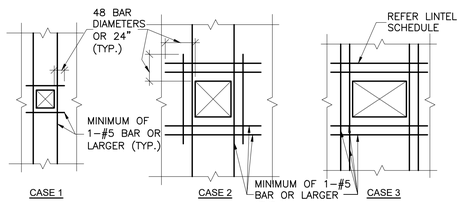

CASE 1 APPLIES TO: ALL OPENINGS 2 FEET OR LESS BOTH WAYS.

CASE 2 APPLIES TO: ALL OPENINGS EXCEEDING 2 FEET BUT NOT MORE THAN 4 FEET BOTH WAYS, WHERE NO LINTEL IS INDICATED

CASE 3 APPLIES TO: ALL OPENINGS EXCEEDING 4 FEET AND WIDER

NOTE: 1.) WHERE VERTICAL REINFORCING CONSISTS OF 2 BARS OR MORE EACH BAR SHALL BE PLACED IN A SEPARATE CELL
2.) WHERE OPENING IS SUPPORTED BY A PERPENDICULAR WALL AND ONLY 8" OF WALL EXTENDS BEYOND THE OPENING, HOOK LINTEL AND SILL REINFORCING 90°

8 REINFORCING AROUND CMU WALL OPENING
SCALE: NONE

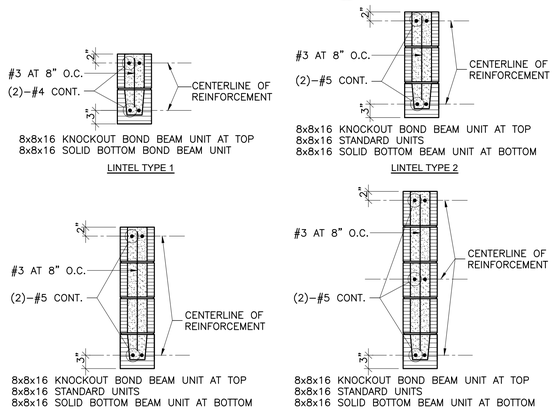

9 TYP. LINTEL TYPES
SCALE: NONE

NON-LOAD BEARING CMU LINTEL SCHEDULE	
TYPE	SPAN IN FEET
1	UP TO 4'-0"
2	4'-1" TO 6'-8"
3	6'-9" TO 9'-4"
4	9'-5" TO 12'-0"

NOTE: REFER (#) ON PLANS FOR LINTEL TYPES.

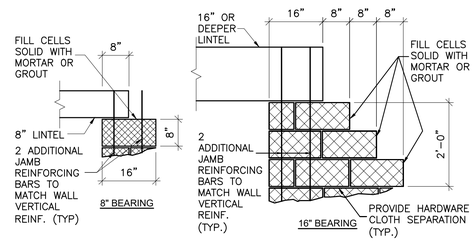

10 BEARING DETAILS TYP. LINTEL TYPES
SCALE: NONE

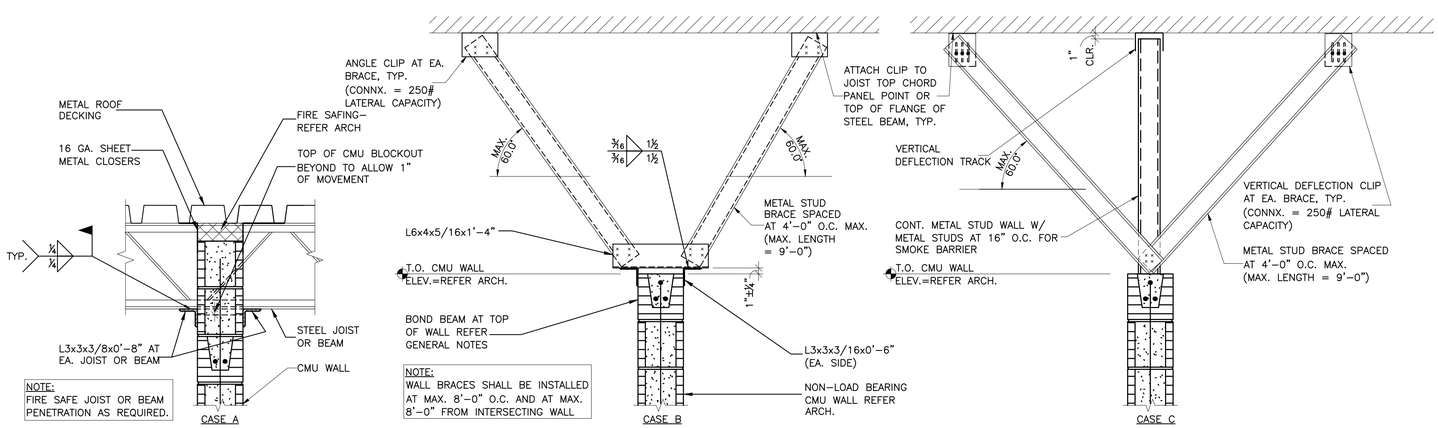

NOTE:
FIRE SAFE JOIST OR BEAM PENETRATION AS REQUIRED.

NOTE:
WALL BRACES SHALL BE INSTALLED AT MAX. 8'-0" O.C. AND AT MAX. 8'-0" FROM INTERSECTING WALL

11 TYP. BRACING AT TOP OF NON-LOAD BEARING CMU
SCALE: NONE

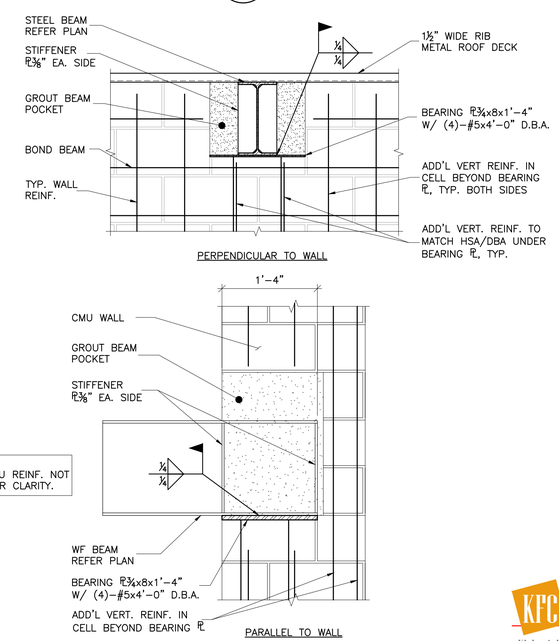

NOTE:
HORIZ. CMU REINF. NOT SHOWN FOR CLARITY.

12 TYPICAL BEAM BEARING PLATE DETAILS
SCALE: NONE

AGP
the Abla Griffin Partnership L.L.C.
313 S. E. 5th Street
MOORE, OK. 73160
405.735.3477
AGP@theAGP.net
www.theAGP.net

CEDAR CREEK
CIVIL

KFC ENGINEERING
STRUCTURAL

SALAS O'BRIEN
MECHANICAL / ELECTRICAL

PROFESSIONAL STRUCTURAL ENGINEER
BRANDON W. BIRCH
26145
OKLAHOMA
04/01/2026

CC
drawn by

BB
checked by

AUGUST 2025
date

revisions

MOORE PUBLIC SCHOOLS

WESTMOORE HIGH SCHOOL ENTRY UPGRADES

sheet no:

S105

KFC engineering
Kirkpatrick Forest Curtis PC
Structural Engineering
OK CA #3888, EXP. 06/30/27
1300 N. Walker, Suite 200
Oklahoma City, OK 73103
405.528.4596 | kfcengr.com

OWNERSHIP USE OF DOCUMENTS:

AGP EXPRESSLY RESERVES ITS COPYRIGHT AND OTHER PROPERTY RIGHTS OF ALL PLANS AND DRAWINGS DESIGNED AND/OR PRODUCED. PLANS AND DRAWINGS ARE NOT TO BE REPRODUCED IN ANY FORM OR MANNER WITHOUT THE EXPRESSED WRITTEN CONSENT OF AGP.