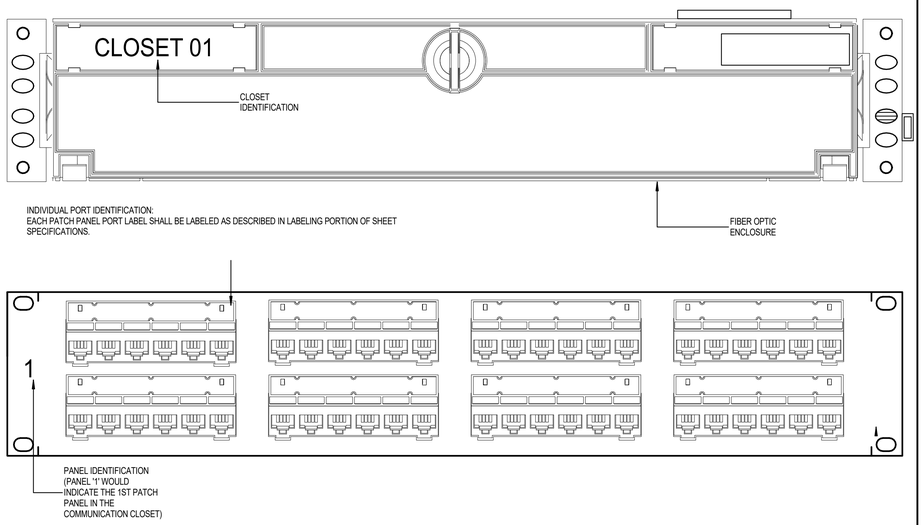

INDIVIDUAL PORT IDENTIFICATION:
EACH PATCH PANEL PORT LABEL SHALL BE LABELED AS DESCRIBED IN LABELING PORTION OF SHEET SPECIFICATIONS.

INDIVIDUAL PORT IDENTIFICATION:
EACH PATCH PANEL PORT LABEL SHALL BE LABELED AS DESCRIBED IN LABELING PORTION OF SHEET SPECIFICATIONS.

CABINET NAMING:
ALL CABINETS IN THE SAME ROOM SHALL HAVE THE SAME NAME. FOR EXAMPLE CABINETS IN THE MDF WILL ALL BE LABELED CABINET 01. CABINETS IN THE FIRST IDF SHALL ALL BE LABELED 02.

CONTRACTOR TO CONTACT MPS TECHNOLOGY TO CONFIRM.

01 FIBER ENCLOSURE/ COPPER PATCH PANEL LABELING DETAIL — NOT TO SCALE

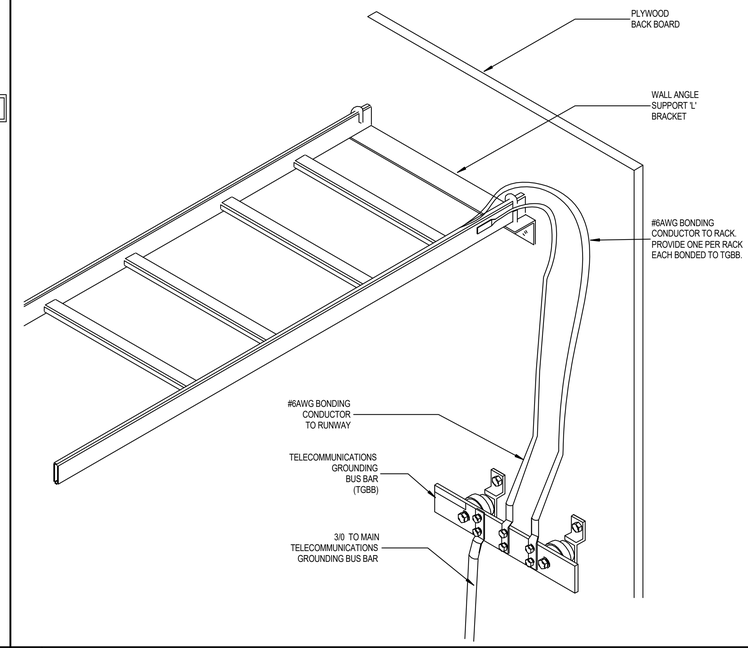

02 CABLE RUNWAY - GROUNDING AND BONDING — NOT TO SCALE

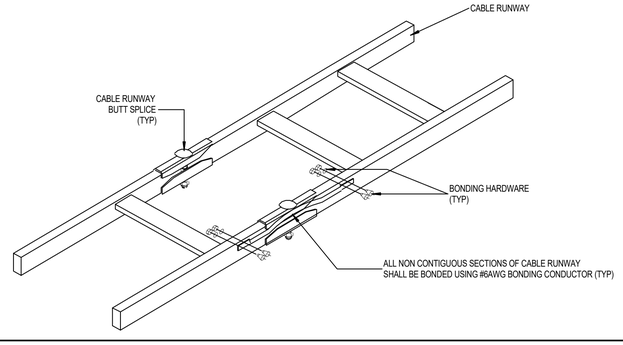

03 CABLE RUNWAY - BONDING AND BUTT SPLICE — NOT TO SCALE

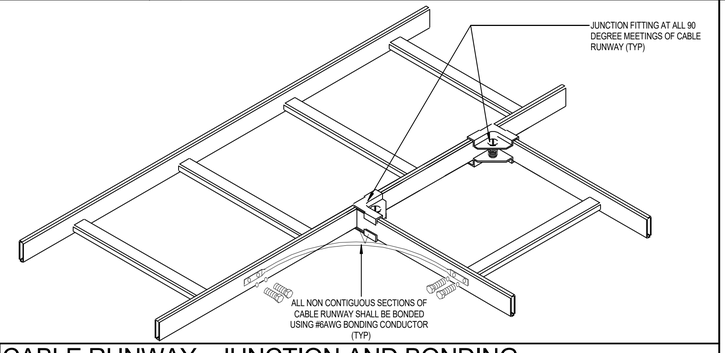

04 CABLE RUNWAY - JUNCTION AND BONDING — NOT TO SCALE

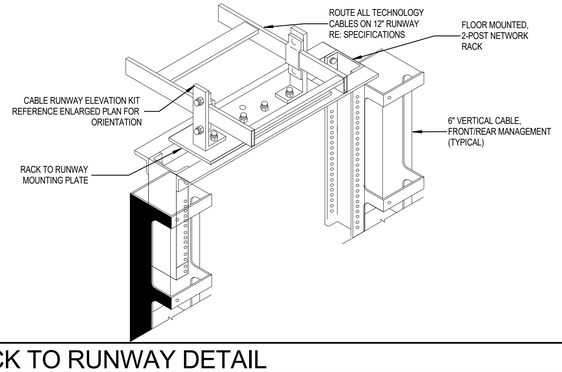

05 RACK TO RUNWAY DETAIL — NOT TO SCALE

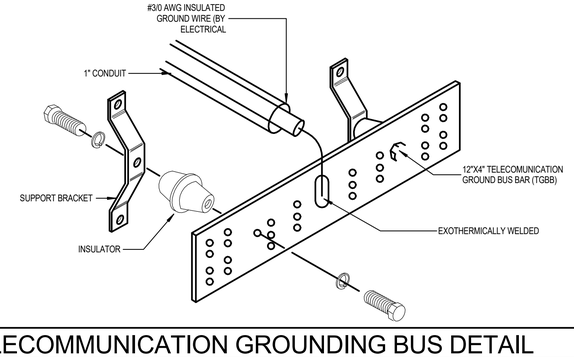

06 TELECOMMUNICATION GROUNDING BUS DETAIL — NOT TO SCALE

AGP
the Abla Griffin Partnership L.L.C.

313 S. E. 5th Street
MOORE, OK. 73160
405.735.3477
AGP@theAGP.net
www.theAGP.net

CEDAR CREEK
CIVIL

KFC ENGINEERING
STRUCTURAL

SALAS O'BRIEN
MECHANICAL / ELECTRICAL

Author
drawn by

Checker
checked by

APRIL 2026
date

REVISIONS

Δ	DESCRIPTION	DATE

MOORE PUBLIC SCHOOLS

SOUTHGATE ELEMENTARY KITCHEN UPGRADES and ADDITION

sheet no:

T501

Salas O'Brien
Salas O'Brien, Inc. - Oklahoma City
2900 S. Telephone Road, Suite 120
Moore, OK 73160
CA#: 9820 Expiration Date: 06/30/2027
Salas O'Brien Project Number: 2650-00226-00

OWNERSHIP USE OF DOCUMENTS:

AGP EXPRESSLY RESERVES ITS COPYRIGHT AND OTHER PROPERTY RIGHTS OF ALL PLANS AND DRAWINGS DESIGNED AND/OR PRODUCED. PLANS AND DRAWINGS ARE NOT TO BE REPRODUCED IN ANY FORM OR MANNER WITHOUT THE EXPRESSED WRITTEN CONSENT OF AGP.