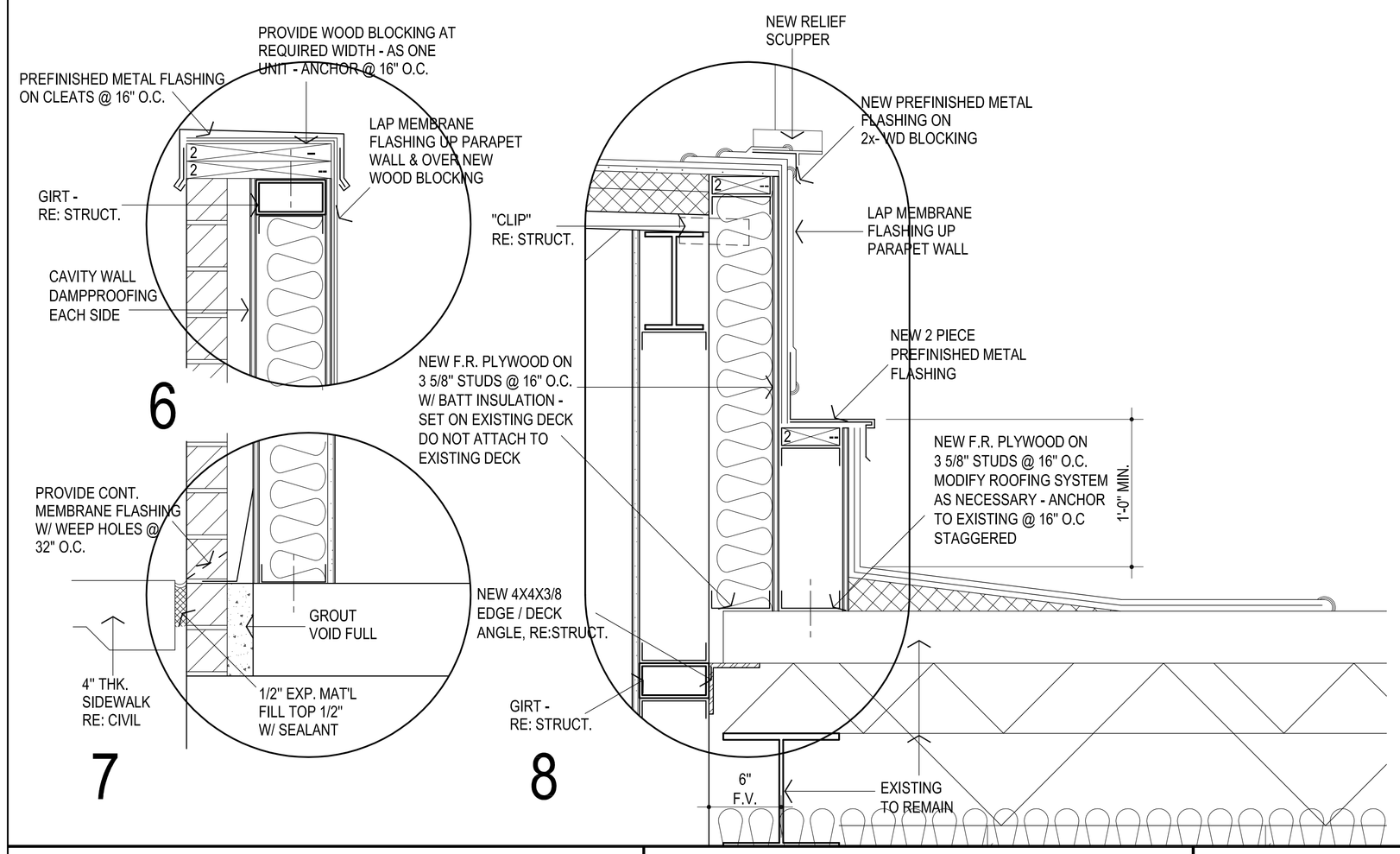


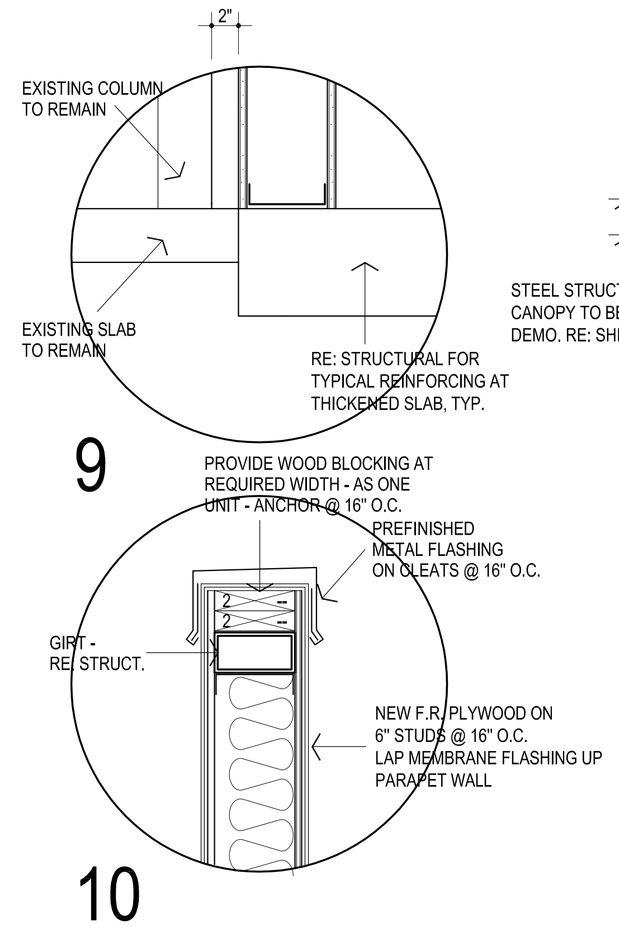


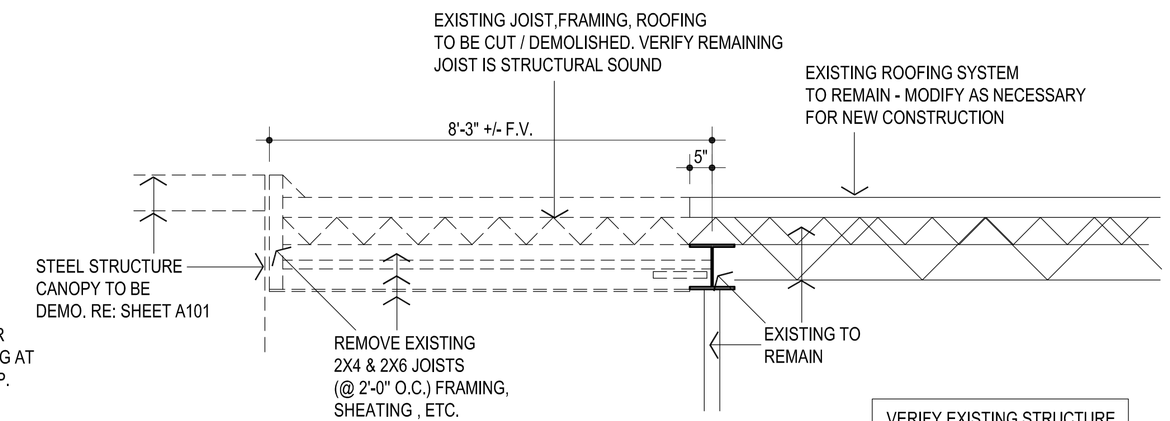


VERIFY EXISTING STRUCTURE CONDITIONS AND MODIFY AS NECESSARY

11 EXISTING OVERHANG SECTION
1/2" = 1'-0"

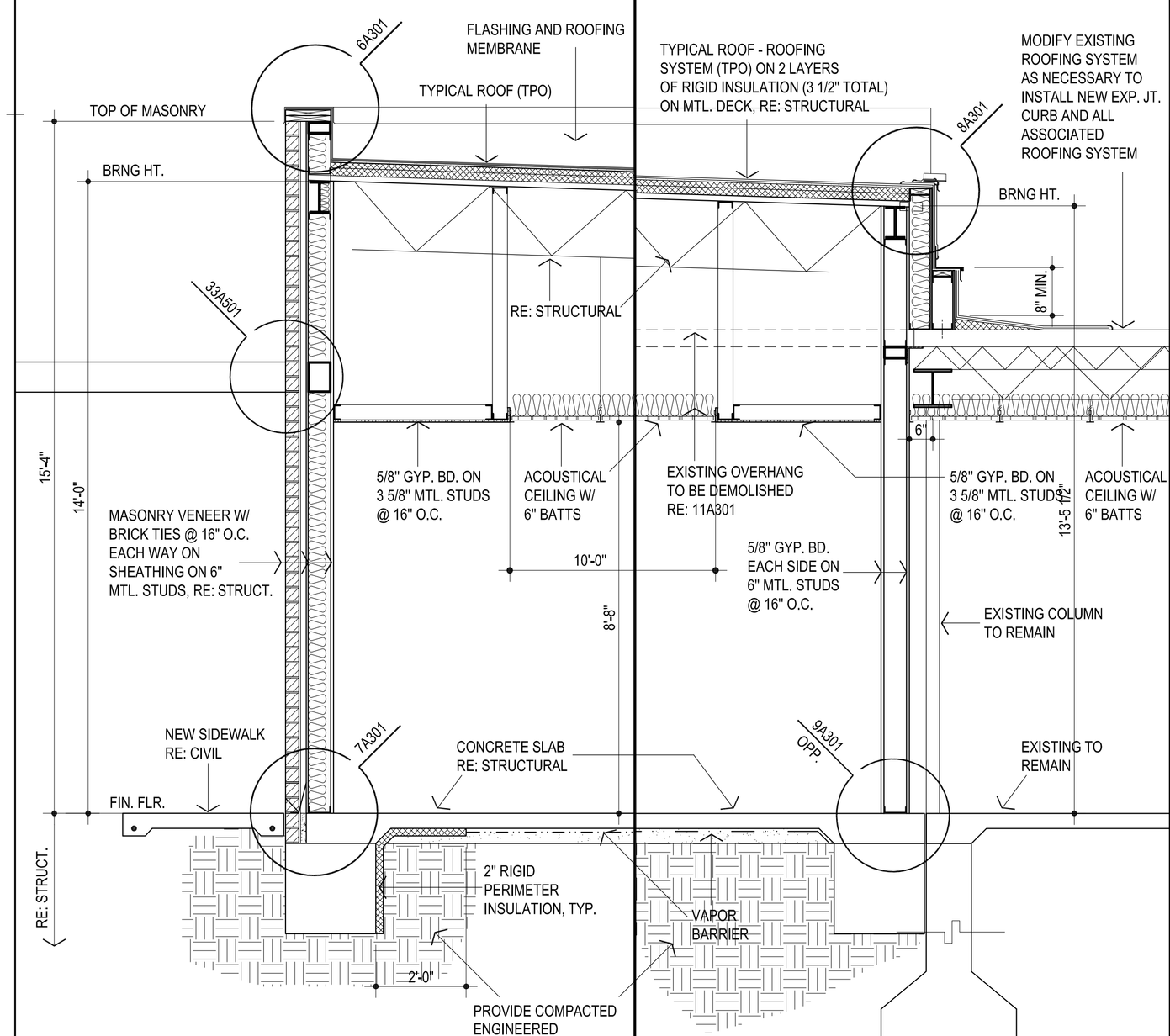


1 WALL SECTION
1/2" = 1'-0"

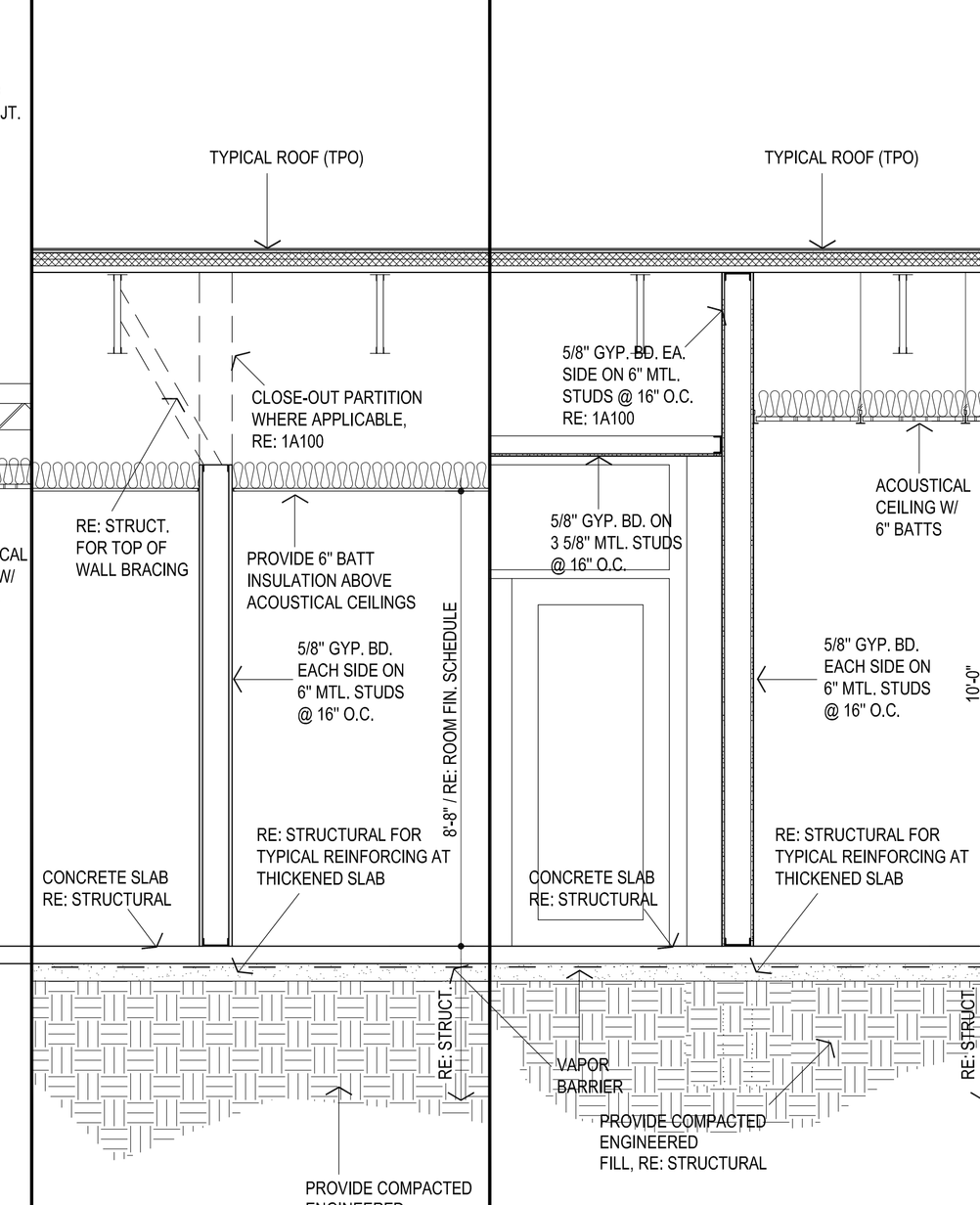


2 WALL SECTION
1/2" = 1'-0"




3 WALL SECTION
1/2" = 1'-0"




4 WALL SECTION
1/2" = 1'-0"

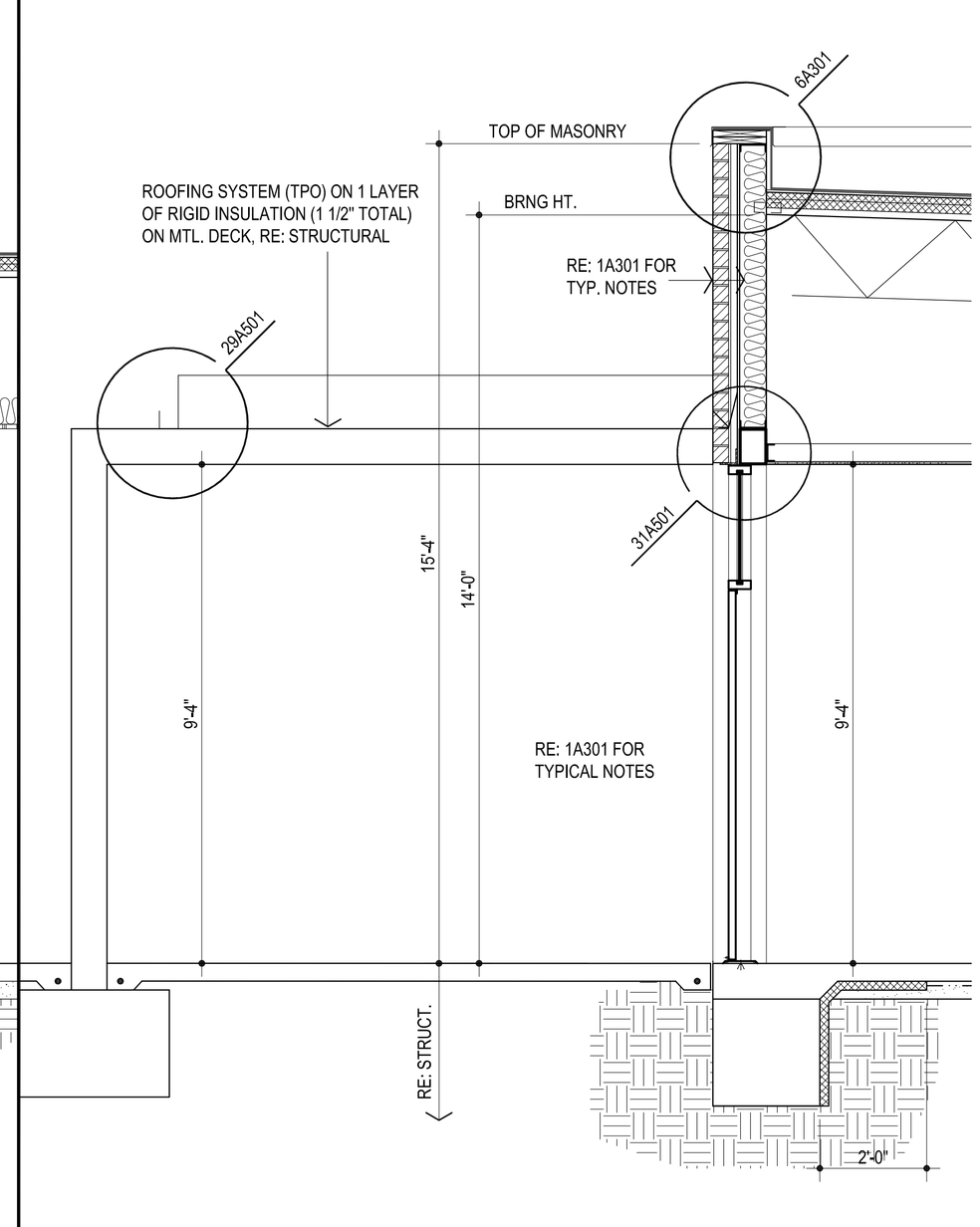


5 WALL SECTION
1/2" = 1'-0"


AGP
the Abla Griffin Partnership L.L.C.
201 N. BROADWAY
SUITE 210
MOORE, OK. 73160
405.735.3477
AGP@theAGP.net
www.theAGP.net


KFC ENGINEERING
STRUCTURAL

SALAS O'BRIEN
MECHANICAL / ELECTRICAL

STATE OF OKLAHOMA
MICHAEL L. ABLA
2639
OKLAHOMA CITY, OKLAHOMA
LICENSED ARCHITECT
3/28/23

CG
drawn by

MA
checked by

MARCH 2023
date

revisions

MOORE PUBLIC SCHOOLS
BOARD OF EDUCATION
MOORE, OKLAHOMA

MOORE Public Schools
LEARNING FOR LIFE

OFFICE ADDITION - SOUTHGATE ELEMENTARY SCHOOL

sheet no:

A301


OWNERSHIP USE OF DOCUMENTS:

AGP EXPRESSLY RESERVES ITS COPYRIGHT AND OTHER PROPERTY RIGHTS OF ALL PLANS AND DRAWINGS DESIGNED AND/OR PRODUCED. PLANS AND DRAWINGS ARE NOT TO BE REPRODUCED IN ANY FORM OR MANNER WITHOUT THE EXPRESSED WRITTEN CONSENT OF AGP.