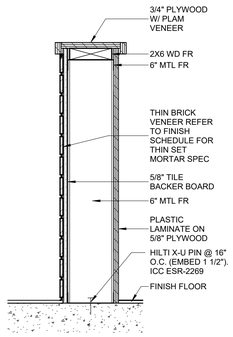

33 SNACK BAR SECTION
SCALE: 1 1/2" = 1'-0"

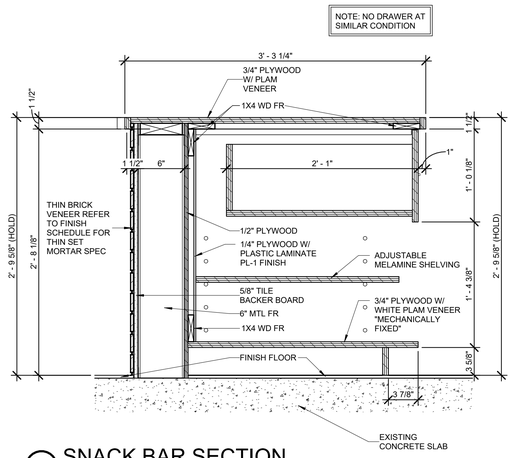

31 SNACK BAR SECTION
SCALE: 1 1/2" = 1'-0"

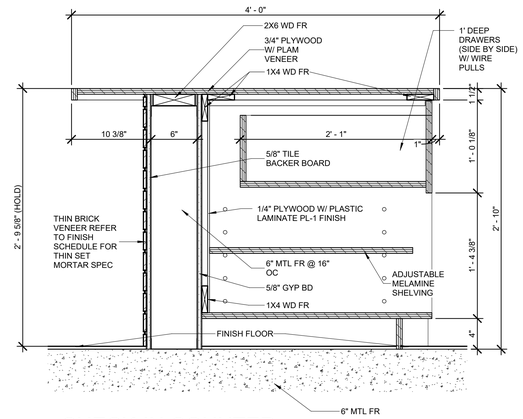

23 CHECK-IN COUNTER
SCALE: 1 1/2" = 1'-0"

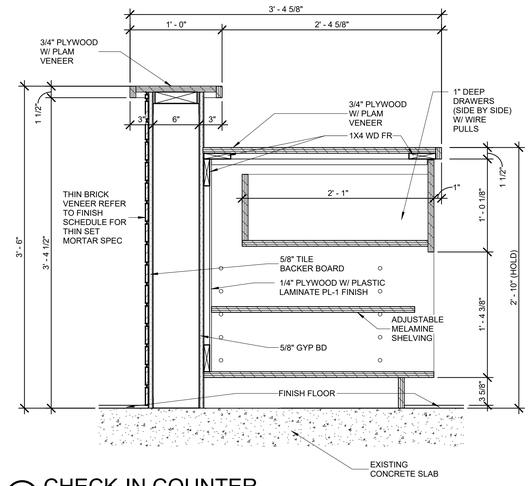

21 CHECK-IN COUNTER
SCALE: 1 1/2" = 1'-0"

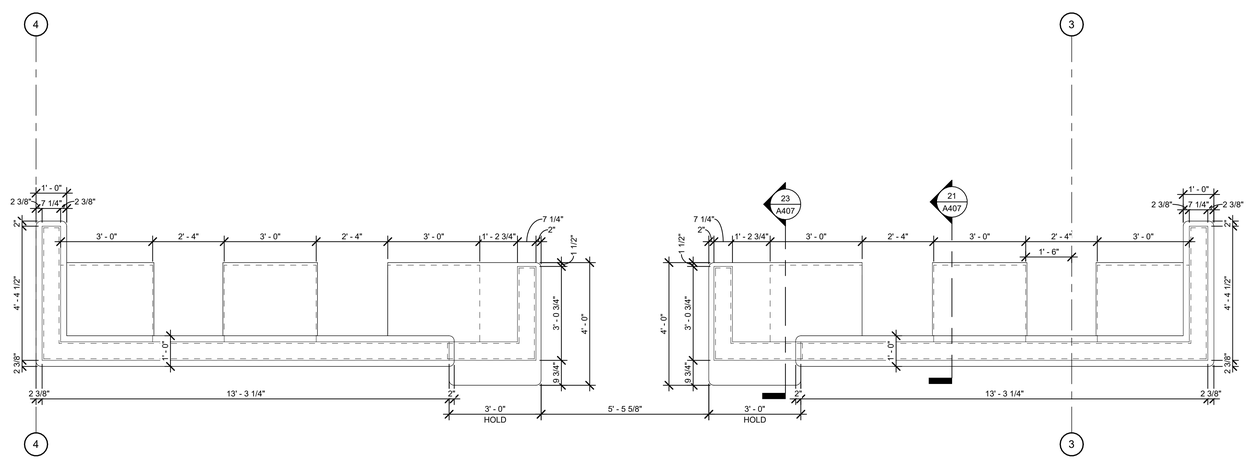

1 CHECK-IN COUNTER PLAN
SCALE: 1/2" = 1'-0"

Apogee
Architectural Partners
A Spirit Led Company
16775 ADDISON ROAD, SUITE 500
ADDISON, TX 75001
PH: (469) 960-2322

PLANS, MAPS, SPECIFICATIONS, STUDIES AND REPORTS NOT CONTAINING A SEAL IMPRINT ACCOMPANIED BY AN ORIGINAL SIGNATURE BY THE LICENSED PROFESSIONAL MAY HAVE BEEN FRAUDULENTLY ALTERED AND SHALL NOT BE CONSIDERED AN ORIGINAL COPY. ALL INFORMATION SHOULD BE DISREGARDED UNLESS VERIFIED BY THE PROFESSIONAL WHOSE SIGNATURE APPEARS BELOW. COPYRIGHT PROTECTED
© 2025

ISSUE RECORD

DESCRIPTION	DATE
ISSUE FOR PERMIT	06/22/2026

REVISION RECORD

NO	DATE	REVISION

PROFESSIONAL SEAL

06/22/26

REMODEL

PROJECT NAME

1100 W. MAIN ST.
NORMAN, OK 73069

PROJECT NUMBER
26-0061

SHEET TITLE
ENLARGED PLANS & DETAILS

SHEET NUMBER
A407