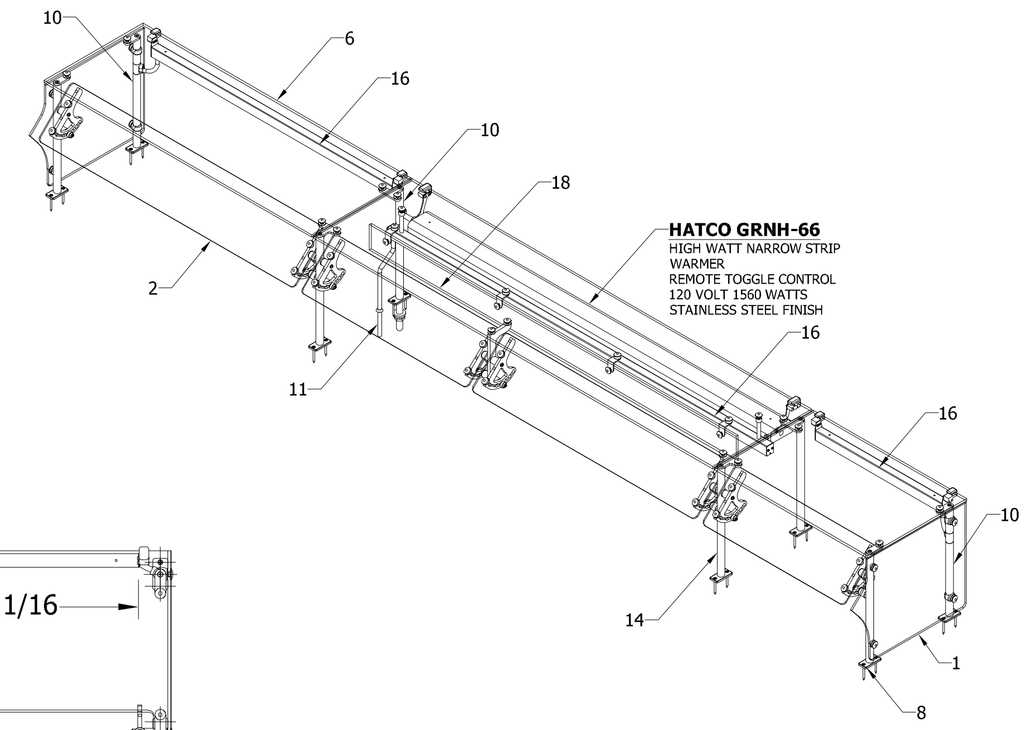

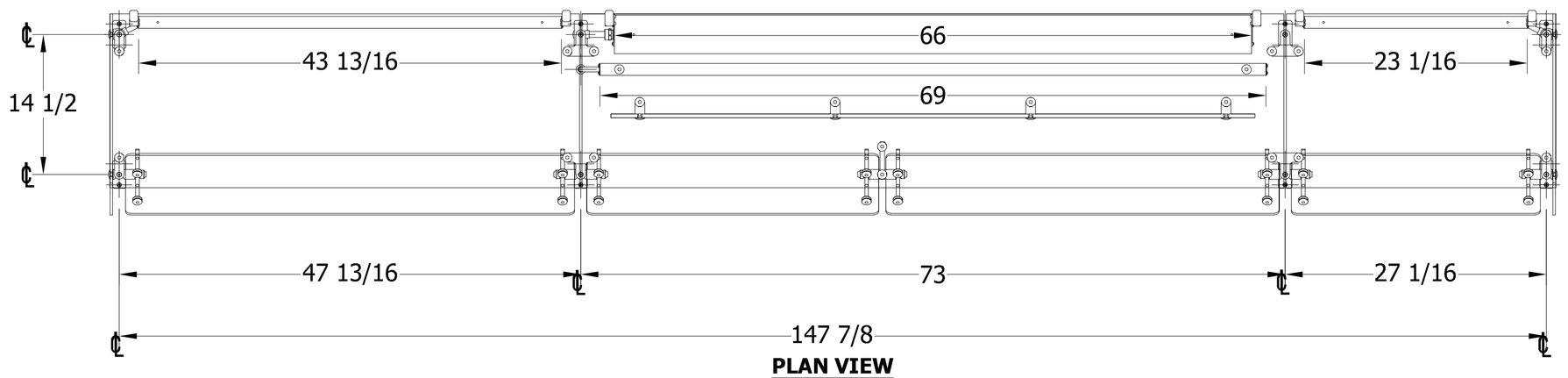

PLAN VIEW

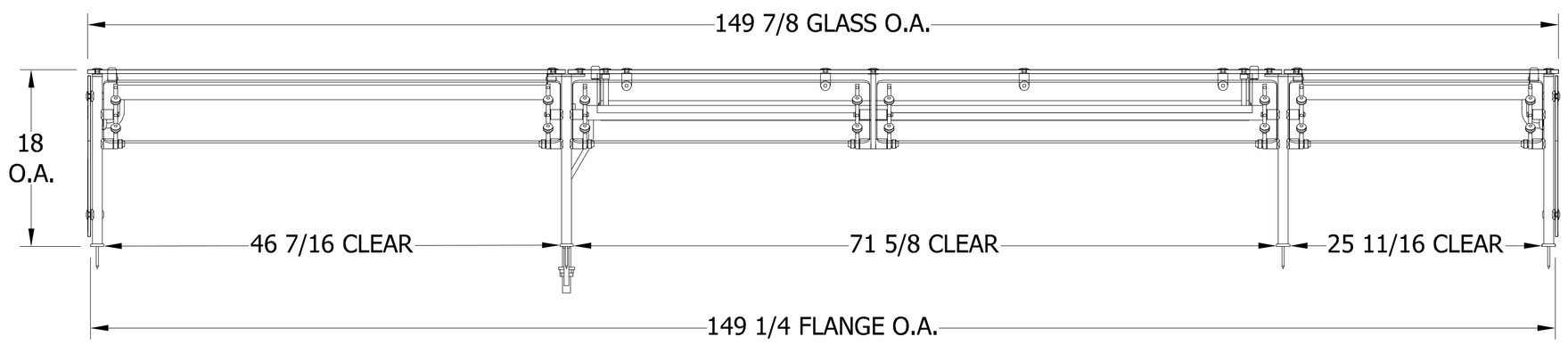

FRONT VIEW

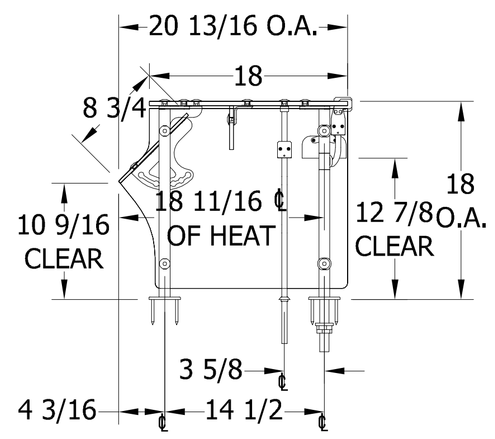

SIDE VIEW

V-G® by VERSA-GARD®

3663 Southland Drive
Flowery Branch, Ga 30542
PH: 678-730-4155
FX: 678-730-2919

MODEL/ITEM: 1-#48A-VG3-SK-E-HTLED

FINISH: SATIN CLEAR ANODIZED ALUMINUM

All product designs © **Versa-Gard**® 2025. No part of the drawings / designs / pictures / renderings represented may be reproduced or transmitted in any form or by photocopying, etc. without expressed written permission by Versa-Gard.

PROJECT:	CLIENT:	QTY.:	DRAWN BY:	DATE:	APPROVED BY:
MOORE PUBLIC SCHOOLS OLD SCHOOL KITCHEN ADDITION	STURM CONSULTING	1	KW	08/05/25	
	CUSTOMER PO: 52190		REVISED BY:	REV. DATE:	SHEET NO.: 1 OF 2

NSF

NORTH

1 FOODSERVICE EQUIPMENT SNEEZE GUARD PLAN

1/4' = 1'-0"

AGP
the Abla Griffin Partnership L.L.C.

313 S. E. 5th Street
MOORE, OK. 73160
405.735.3477
AGP@theAGP.net
www.theAGP.net

CEDAR CREEK
CIVIL

KFC ENGINEERING
STRUCTURAL

SALAS O'BRIEN
MECHANICAL / ELECTRICAL

RS
drawn by

RS
checked by

November 2025
date

revisions

MOORE PUBLIC SCHOOLS

OLD SCHOOL UPGRADES

sheet no:

FS801

OWNERSHIP USE OF DOCUMENTS:

AGP EXPRESSLY RESERVES ITS COPYRIGHT AND OTHER PROPERTY RIGHTS OF ALL PLANS AND DRAWINGS DESIGNED AND/OR PRODUCED. PLANS AND DRAWINGS ARE NOT TO BE REPRODUCED IN ANY FORM OR MANNER WITHOUT THE EXPRESSED WRITTEN CONSENT OF AGP.