A R-1 REFRIGERATION RACK OUTLINE DRAWING
MPL-2

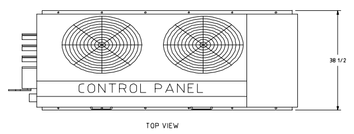

TOP VIEW

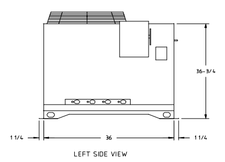

LEFT SIDE VIEW

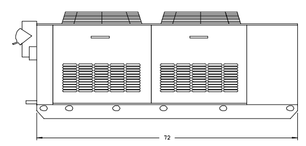

FRONT VIEW

NOTES:
1. TOTAL SYSTEM WEIGHT: 584 LBS
2. INSTALLATION CLEARANCE REQUIRES 3 FT ON ALL SIDES

B R-1 SUGGESTED ROOF PAD DETAILS
MPL-2

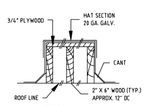

SECTION A-A

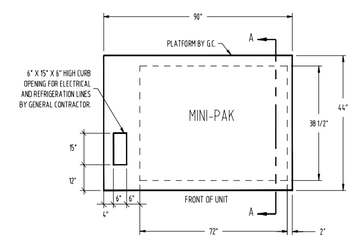

G.C. NOTES

1-PLATFORM TO BE INSTALLED LEVEL.
2-PROVIDE SHEETMETAL HAT SECTION WITH WATER TIGHT SOLDERED JOINTS.
3-RACK FILL OPENING WITH HOT PITCH AFTER INSTALLATION.

COLDZONE ENGINEERING SUMMARY

POWER SUPPLY: 460/3/60 — MIN CIRCUIT AMPACITY 16 A
CONNECTED LOAD 15 A — FUSE SIZE 20 A

IDENT		FIXTURES				COMPRESSORS									EVAPORATOR COILS								CONNECTION SIZES **					ACCESSORIES							
				FIXT.°F						COMPRESSOR ELECTRICAL CHARACTERISTICS																					FURNISHED BY (SEE CODE)			
SYSTEM	ITEM NUMBER	DESCRIPTION	FIXTURE LOAD	FIX T.	SUCT.	REFRIG. R-	COMPRESSOR MODEL NUMBER	H.P.	RECEIVER CAPACITY LBS. (@ 50%)	% OF LOAD CAPACITY	RLA	V	PH	COOLING CAPACITY BTU/H AT 105 AMBIENT	DEFROST *	QUANTITY	MODEL NO.	NOMINAL CAPACITY TOTAL	MFR. REMARKS	FAN 1PH AMP	FAN 1PH V	HEATER AMP	HEATER V	HEATER PH	TOTAL SYSTEM AMPS	ROUTE *	SUCTION	LIQUID	DRAIN FITTING: - NPT	DEFROST OPTION NO.	CIRCUIT WITH DEFROST TIME CLOCK	HEATED AND INSULATED RECEIVER	SUCTION ACCUMULATOR	SUCTION FILTER	OIL SEPARATOR	TEST	7-POND	EXP VALVE	REMARKS
A	-	Walk-in Cooler	7716	35	25	404C	YSIDNA1	1	10.00	117%	2.4	460	3	9023	A	1	CAL6A088DDA	8272	COLDZONE	1	208-230/1				3.4		5/8	3/8	3/4-14	ECONET	NO	NO	NO	SEALED	NO	FI	FL	FI	
B	-	Walk-in Freezer	8592	-10	-20	404C	YSIDMS4	3 1/2	34.00	131%	1.8	460	3	8786	B	1	CAL6E092DDA	8648	COLDZONE	1	208-230/1	9.8	208-230	1	5.8		7/8	3/8	3/1-14	ECONET	NO	NO	YES	SEALED	NO	FI	FL	FI	

SYSTEM ITEM NO:-	CONDENSER FAN: 2 CONDENSER FAN AMPS: 3.8	LEGEND	*	A-AIR DEFROST G-GRAVITY(W/TIMER) E- ELECTRIC DEFROST DD-DEMAND DEFROST	*	S-SINGLE M-MAIN B-BRANCH	**	VERIFY LINE SIZES WITH JOB SITE CONDITIONS	MFR- FURNISH WITH FIXTURE FI- CZ TO FURNISH AND SHIP LOOSE FI- CZ TO FURNISH AND INSTALL ON UNIT	Z* - MULTIPLE EVAPORATORS TIED TO ONE COMPRESSOR TO BE ROPS AND BY OTHERS RC- FURNISH AND INSTALL BY REF. CONTRACTOR

NOTE:
CONDENSER SELECTED FOR 1000 FEET ELEVATION AND 105°F AMBIENT TEMPERATURE
ALL COMPRESSOR CIRCUITS INDIVIDUALLY PIPED WITH SEALED LIQUID AND SUCTION FILTERS, CRANKCASE HEATERS, AND HEAD PRESSURE CONTROL VALVES
ELECTRO/MECHANICAL CONTROLS PER COMPRESSOR WITH HIGH/LOW PRESSURE SWITCHES
POWDER COATED STEEL CABINET PANELS

CONDENSER WITH ENHANCED TUBING

C R-1 ELECTRICAL INSTALLATION

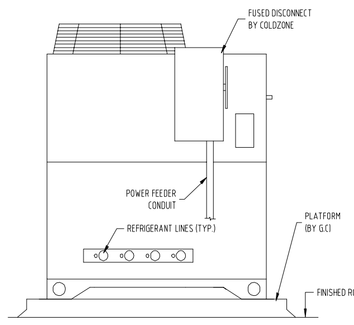

D R-1 COLDZONE EVAPRATOR COIL
LOW PROFILE

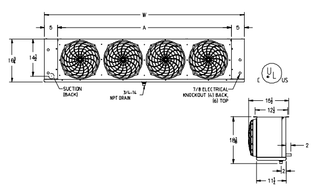

EVAPORATOR COIL(S) INCHES						
MODEL NUMBER	QTY	FIGURE	NO. OF PASS	W	A	WEIGHT (LBS. EACH)
CAL6A088DDA	1	1	2	43-5/8	33-1/4	52
CAL6E092DDA	1	1	2	43-5/8	33-1/4	55

REFRIGERATION SYSTEM ELECTRICAL SCHEDULE / POWER SUPPLIED BY ELECTRICAL CONTRACTOR						
SYSTEM NO.	QTY.	DESCRIPTION	VOLTAGE/PH	AMPS	MCA	MOPD
-	1	MPL-2	460/3/60	15	16	20
A	1	CAL6A088DDA	208-230/1		15	20
B	1	CAL6E092DDA	208-230/1		15	20

ENGINEERING GUIDE TO SPECIFICATION
FOR REMOTE REFRIGERATION PACKAGE
MINI-PAK REFRIGERATION SYSTEM

THE REFRIGERATION PACKAGE SHALL BE A PRE-ENGINEERED AND FACTORY ASSEMBLED UNIT. TRADE NAME "MINI-PAK". AS MANUFACTURED BY COLDZONE, A DIVISION OF HEAT TRANSFER PRODUCTS GROUP. 1810 VINEYARD AVE. ONTARIO, CA 91761 PHONE: (800) 772-2653; FAX: (714) 529-8503.

CONTRACTOR SHALL FURNISH AND INSTALL, WHERE SHOWN ON PLANS, (1) COLDZONE U.L. APPROVED "MINI-PAK".

1. MINI-PAK REFRIGERATION SYSTEM
   THE ENTIRE UNIT IS TO BE WEATHER-PROOFED AND MINIMUM OF TWO COATS OF PAINT SHALL BE APPLIED TO MAKE THE UNIT RUST-PROOF. THE UNIT SHALL BE PROVIDED WITH MULTI-CIRCUITED AIR-COOLED CONDENSER FOR COOLER, FREEZER AND ICE MACHINES. SUCTION LINE FOR LOW TEMPERATURE UNIT MUST BE INSULATED WITH ARMAFLEX.

2. REFRIGERATION UNITS
A. CRANKCASE HEATER SHALL BE PROVIDED WITH EVERY COMPRESSOR
B. AIR-COOLED CONDENSING UNITS SHALL BE SEMI-HERMETIC, HERMETIC OR GLACIER SCROLL TYPE (COPELAND). EACH UNIT SHALL BE EQUIPPED WITH HIGH/LOW PRESSURE CONTROL, LIQUID LINE DRIER, SIGHT GLASS, SUCTION AND DISCHARGE VIBRATION ELIMINATOR, AND HEAD PRESSURE CONTROL.
C. ALL COMPRESSOR UNITS SHALL BE NEW AND FACTORY ASSEMBLED TO OPERATE WITH THE REFRIGERANT SPECIFIED IN THE ENGINEERING SUMMARY SHEET.

3. PIPE-PIPING
A. ALL COPPER TUBING TO BE REFRIGERANT GRADE A.C.R. OR TYPE "L".
B. ALL TUBING SHALL BE SECURELY SUPPORTED AND ANCHORED WITH CLAMPS.
C. ALL REFRIGERANT LINES SHALL BE EXTENDED TO ONE SIDE OF THE PACKAGE IN A NEAT AND ORDERLY MANNER.
D. SILVER SOLDER AND/OR SIL-FOS SHALL BE USED FOR ALL REFRIGERANT PIPING. SOFT SOLDER IS NOT ACCEPTABLE.
E. ALL PIPING FROM THE COOLER, FREEZER AND ICE MACHINE TO THE CONDENSING UNIT AND COIL HAVE BEEN CONNECTED. THE BALANCE OF THE SYSTEM SHALL BE LEAK TESTED WITH ALL VALVES OPEN.

4. CONTROL PANEL
A. THE PACKAGE SHALL HAVE FACTORY MOUNTED AND PRE-WIRED CONTROL PANEL COMPLETE WITH INTERLOCKED MAIN FUSED DISCONNECT, COMPRESSOR CIRCUIT BREAKERS, CONTACTORS AND TIME CLOCKS WIRED FOR SINGLE POINT POWER CONNECTION.
B. ELECTRICAL CONTRACTOR SHALL PROVIDE AND INSTALL MAIN POWER LINES TO PANEL, AND USE WIRE HARNESS WIRING FOR CONTROL AND DEFROST HEATER BETWEEN THE DEFROST CLOCK AND THE REFRIGERATION FIXTURES, ALL IN ACCORDANCE WITH THE WIRING DIAGRAM AND LOCAL CODES.

GENERAL NOTES

1. GENERAL CONTRACTOR
A. CONTRACTORS SHALL VERIFY ALL DIMENSIONS AND COORDINATE WITH OTHER TRADES.
B. GENERAL CONTRACTOR SHALL PREPARE AND WEATHERPROOFING THE PLATFORM AND CURBED OPENINGS.

2. REFRIGERATION CONTRACTOR
A. THE COMPLETE SYSTEM SHALL BE EVACUATED WITH VACUUM PUMP.
B. ALL COPPER TUBING TO BE REFRIGERANT GRADE A.C.R. OR TYPE "L".
C. CHARGE, TEST, AND ADJUST EACH UNIT TO BE IN AN OPERATIONAL SYSTEM.
D. SILVER SOLDER AND/OR SIL-FOS SHALL BE USED FOR ALL REFRIGERANT PIPING. SOFT SOLDER IS NOT
E. ALL PIPING FROM THE COOLER, FREEZER AND ICE MACHINE TO THE CONDENSING UNIT AND COIL HAVE BEEN CONNECTED. THE BALANCE OF THE SYSTEM SHALL BE LEAK TESTED WITH ALL VALVES OPEN.
F. REFRIGERATION CONTRACTOR TO PROVIDE AND INSTALL DRAIN LINE HEATER IN FREEZER TO BE CONNECTED BY ELECTRICAL CONTRACTOR

3. ELECTRICAL CONTRACTOR
A. ELECTRICAL CONTRACTOR TO PROVIDE POWER FROM REFRIGERATION PACKAGE AND CONNECT CONTROL AND DEFROST SYSTEM AS CALLED FOR IN THE WIRING DIAGRAM.
B. ALL ELECTRICAL WIRING AND INSTALLATION SHALL BE IN ACCORDANCE WITH THE WIRING DIAGRAM AND LOCAL CODES.

4. PLUMBING CONTRACTOR
A. PLUMBING CONTRACTOR TO PROVIDE HARD A.C.R. OR TYPE "L" COPPER DRAIN LINES FOR WALK-IN REFRIGERATOR AND FREEZER. PITCHED 1/4"-PER FOOT OF RUN. IN FREEZER, UNHEATED DRAIN LINE MUST BE OUTSIDE OF FREEZER WALL TO PREVENT FREEZING. TRAP DRAIN LINE OUTSIDE OF REFRIGERATED SPACE TO AVOID ENTRANCE OF WARM AND MOIST AIR.
B. PLUMBING CONTRACTOR TO PROVIDE INDIVIDUAL DRAIN LINE FOR EACH EVAPORATOR UNLESS OTHERWISE CALLED FOR.
C. ALL PLUMBING INSTALLATION SHALL BE IN ACCORDANCE WITH LOCAL CODES.

F R-1 WIRING DIAGRAM FOR
W/I COOLER EVAPORATOR COIL

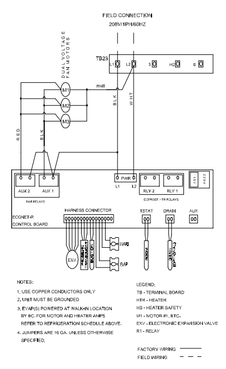

G R-1 WIRING DIAGRAM FOR
W/I FREEZER EVAPORATOR COIL

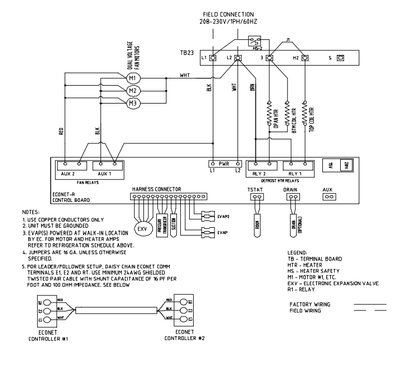

H R-1 DRAIN LINE DETAIL

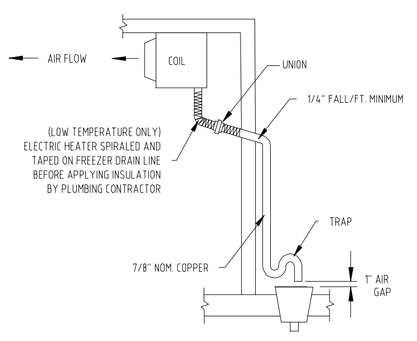

THE INFORMATION DISCLOSED HEREIN WAS ORIGINATED BY AND IS THE PROPERTY OF COLDZONE AND EXCEPT FOR RIGHTS EXPRESSLY GRANTED TO THE CUSTOMER, COLDZONE RESERVES ALL PATENT, PROPERTY, DESIGN, USE, SALE, MANUFACTURING AND REPRODUCTION RIGHTS THERETO.

GENERAL NOTES

REFRIGERATION PIPE SIZES ARE BASED ON A MAXIMUM LINE RUN OF 100 EQUIVALENT FEET FOR LIQUID AND SUCTION LINES. THIS INCLUDES AN ALLOWANCE OF 45 EQUIVALENT FEET FOR VERTICAL RISERS. LINE RUNS LONGER THAN 100 EQUIVALENT FEET MAY VOID THE LINE SIZES INDICATED ON OUR SUBMITTAL DRAWING

IT IS THE INSTALLING CONTRACTORS RESPONSIBILITY TO FOLLOW ALL APPLICABLE CODES AND CURRENT REFRIGERATION INDUSTRY STANDARDS AND PRACTICES WHEN DETERMINING LINE SIZES, AND INSTALLING AND STARTING UP COLDZONE EQUIPMENT

EVAPORATOR AND PIPING SERVICE / ISOLATION VALVES ARE RECOMMENDED FOR PARALLEL AND MULTIPLEX SYSTEMS. THESE VALVES ARE TO BE SUPPLIED AND INSTALLED BY THE INSTALLING CONTRACTOR.

COLDZONE EVAPORATORS WILL HAVE LIQUID LINE SHUT OFF AND SUCTION CHECK VALVES SHIPPED LOOSE FOR FIELD INSTALLATION OUTSIDE WALK-IN (WITHIN NO MORE THAN 10 FEET OF EVAPORATOR).

ALL COLDZONE EVAPORATORS WITH FACTORY MOUNTED LEAK DETECTION FOR A2L MITIGATION

2	HR-PCN Release	10/10/2025
No.	Description	Date

AGP
the Abla Griffin Partnership L.L.C.
313 S. E. 5th Street
MOORE, OK. 73160
405.735.3477
AGP@theAGP.net
www.theAGP.net

CEDAR CREEK
CIVIL

KFC ENGINEERING
STRUCTURAL

SALAS O'BRIEN
MECHANICAL / ELECTRICAL

RS
drawn by

RS
checked by

November 2025
date

revisions

MOORE PUBLIC SCHOOLS

Project Name and Address
Moore Public School-Old School Kitchen
Moore, OK
0
NOT DRAWN TO SCALE

Drawing Number	Job Number
Date 10/7/2025	25-067081
Drawn By RS	Sheet Number R-1

OLD SCHOOL UPGRADES

sheet no:

FS701

OWNERSHIP USE OF DOCUMENTS:

AGP EXPRESSLY RESERVES ITS COPYRIGHT AND OTHER PROPERTY RIGHTS OF ALL PLANS AND DRAWINGS DESIGNED AND/OR PRODUCED. PLANS AND DRAWINGS ARE NOT TO BE REPRODUCED IN ANY FORM OR MANNER WITHOUT THE EXPRESSED WRITTEN CONSENT OF AGP.

NORTH

1 FOODSERVICE EQUIPMENT REFRIGERATION PLAN
1/4" = 1'-0"