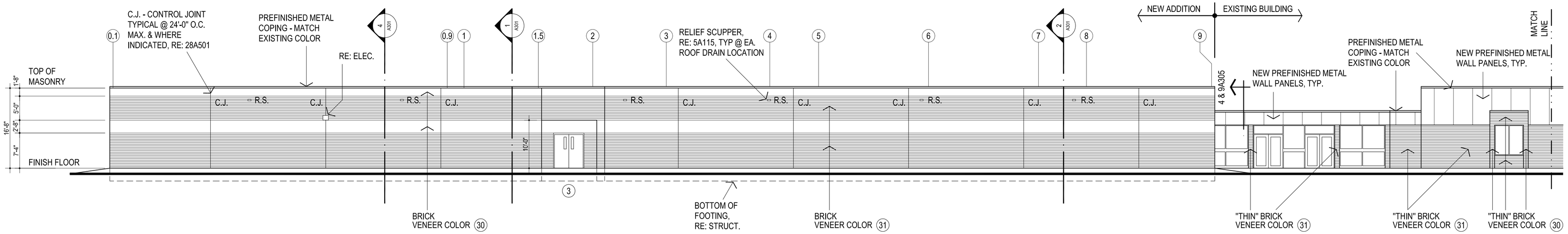

1 EAST ELEVATION

3/32" = 1'-0"

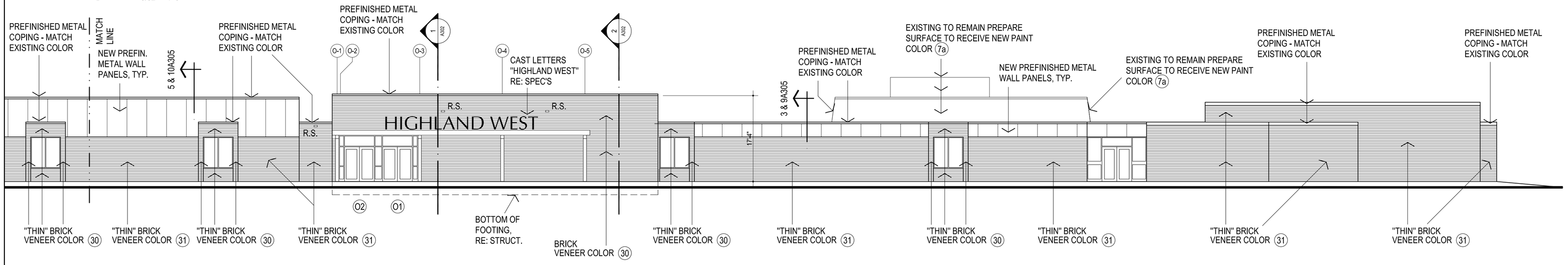

1 EAST ELEVATION - CONT.

3/32" = 1'-0"

GENERAL NOTE:

1. PAINT ALL EXISTING H.M. DOORS & FRAMES COLOR 4
2. PAINT ALL EXISTING WINDOW FRAMES COLOR 4

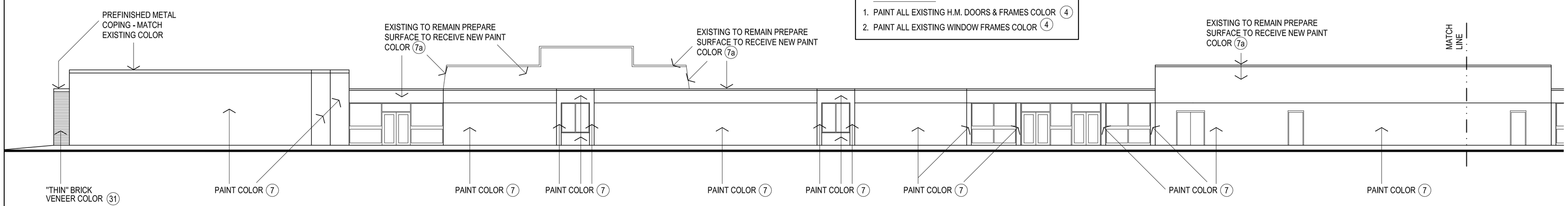

2 WEST ELEVATION

3/32" = 1'-0"

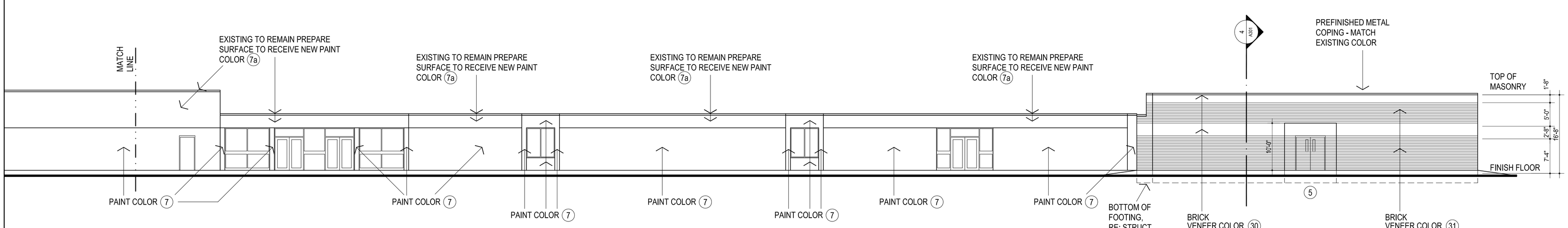

2 WEST ELEVATION - CONT.

3/32" = 1'-0"

AGP
the Abla Griffin Partnership L.L.C.

201 N. BROADWAY
SUITE 210
MOORE, OK. 73160
405.735.3477
AGP@theAGP.net
www.theAGP.net

CEDAR CREEK
CIVIL

KFC ENGINEERING
STRUCTURAL

SALAS O'BRIEN
MECHANICAL / ELECTRICAL

STATE OF OKLAHOMA
MICHAEL L. ABLA
2639
OKLAHOMA CITY, OKLAHOMA
LICENSED ARCHITECT

7/31/23

CG
drawn by

MA
checked by

JULY 2023
date

revisions

MOORE PUBLIC SCHOOLS
BOARD OF EDUCATION
MOORE, OKLAHOMA

MOORE Public Schools
LEARNING FOR LIFE

CLASSROOM ADDITION
HIGHLAND WEST
JUNIOR HIGH SCHOOL

sheet no:

A201a

ELEVATIONS

OWNERSHIP USE OF DOCUMENTS:

AGP EXPRESSLY RESERVES ITS COPYRIGHT AND OTHER PROPERTY RIGHTS OF ALL PLANS AND DRAWINGS DESIGNED AND/OR PRODUCED. PLANS AND DRAWINGS ARE NOT TO BE REPRODUCED IN ANY FORM OR MANNER WITHOUT THE EXPRESSED WRITTEN CONSENT OF AGP.