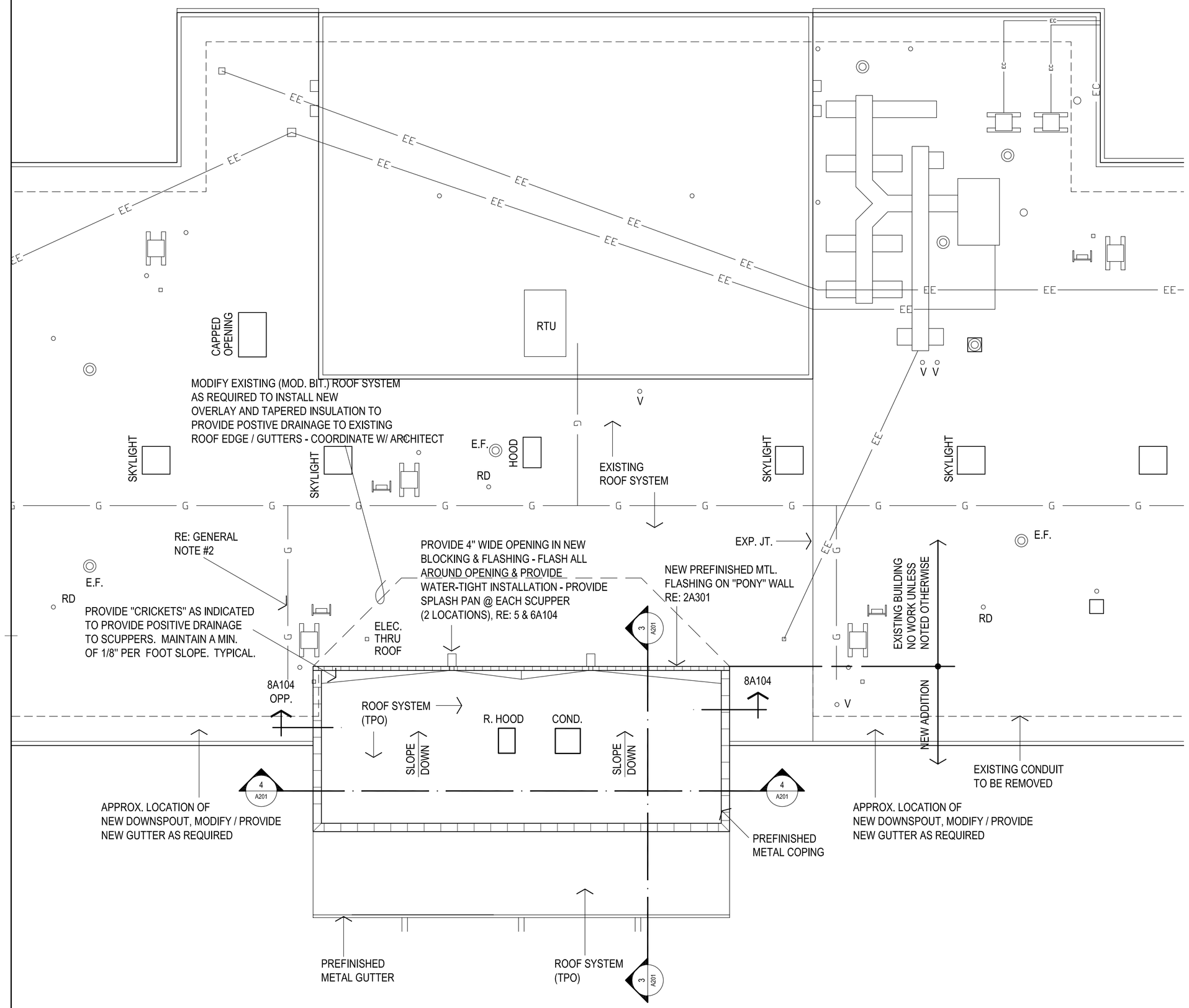

NORTH

1 ROOF PLAN

1/8" = 1'-0"

NOTES:

1. RE: MECH & ELEC. FOR ADDITIONAL ROOF MOUNTED ITEMS. CONTRACTOR TO COORDINATE ALL ROOF MOUNTED ITEMS & PENETRATIONS W/ APPLICABLE TRADES. PROVIDE "CRICKETS" AT HIGH SIDE OF ALL CURBS.
2. REROUTE EXISTING GAS LINE(S) AS REQUIRED FOR NEW ADDITION & NEW ROOFING. PROVIDE ALL MATERIALS AS REQUIRED FOR A COMPLETE AND WATER TIGHT INSTALLATION.

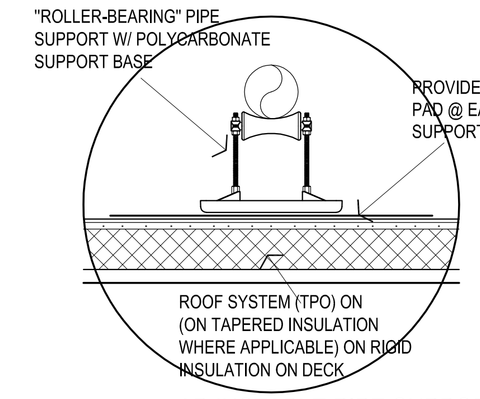

2 ADJUSTABLE PIPE SUPPORTS - FRONT VIEW

NO SCALE

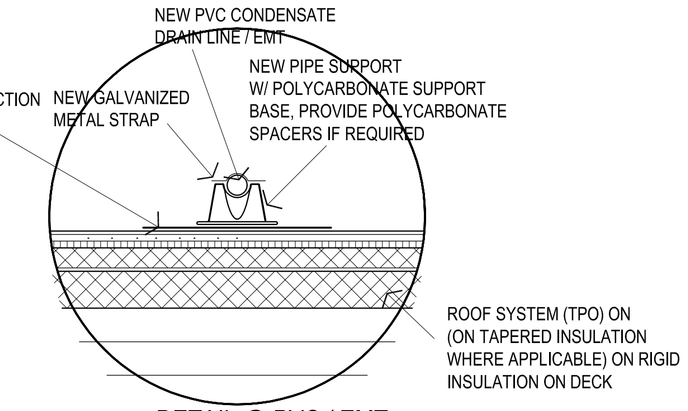

3 DETAIL @ PVC / EMT SUPPORT

NO SCALE

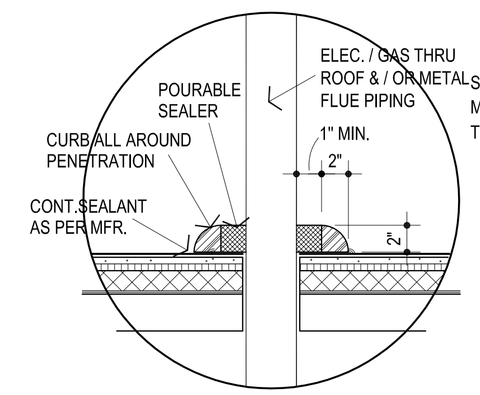

4 PENETRATION DAM / SEALER POCKET @ MAJOR PENETRATIONS

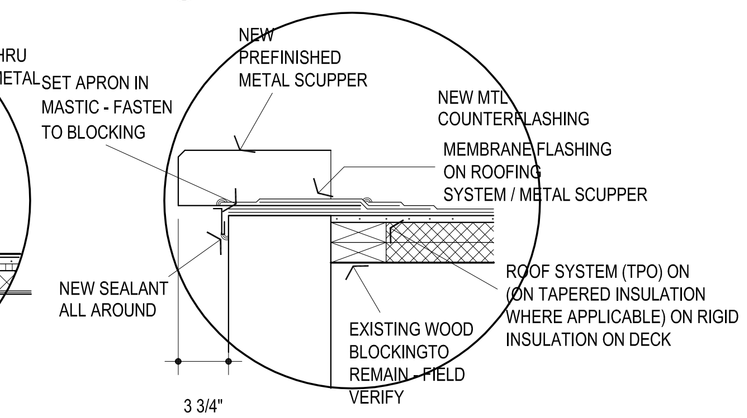

5 RELIEF SCUPPER W/ EXTENSION

NO SCALE

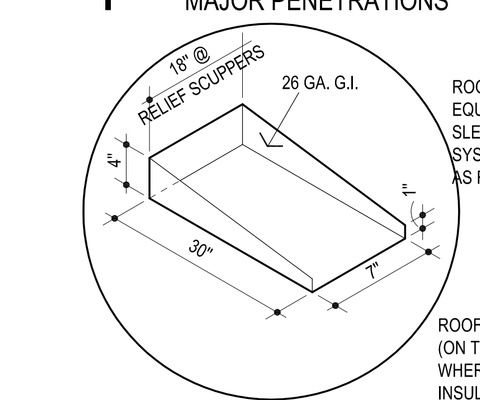

6 SPLASH PAN

NO SCALE

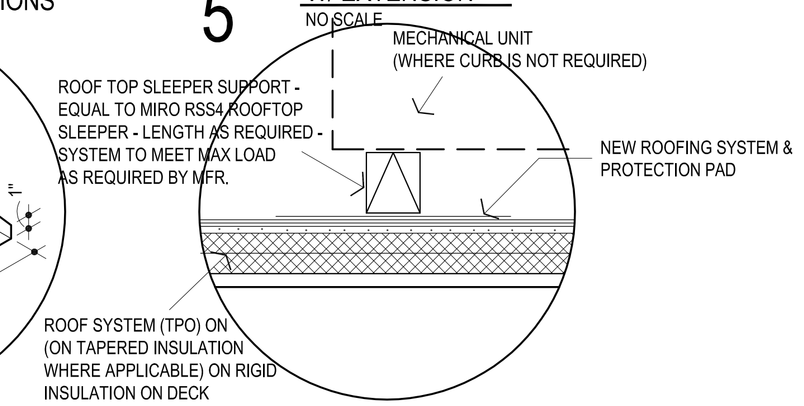

7 MECH. UNIT SUPPORT

NO SCALE

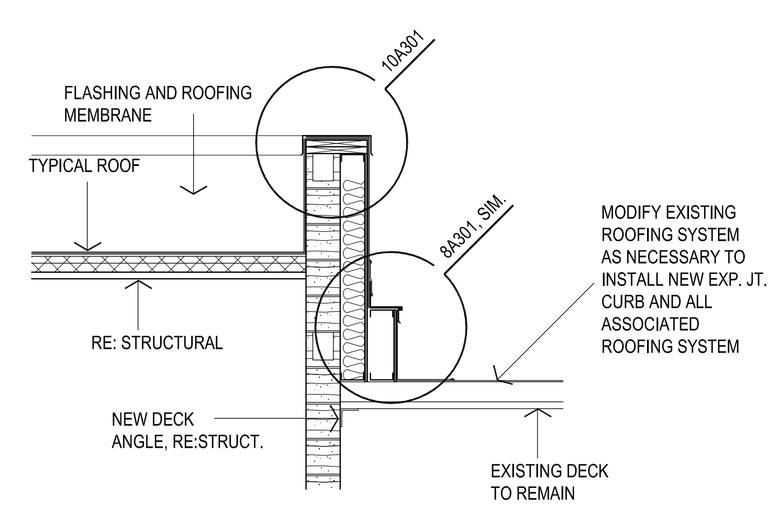

8 WALL SECTION

1/2" = 1'-0"

AGP
the Abla Griffin Partnership L.L.C.
201 N. BROADWAY
SUITE 210
MOORE, OK. 73160
405.735.3477
AGP@theAGP.net
www.theAGP.net

KFC ENGINEERING
STRUCTURAL

SALAS O'BRIEN
MECHANICAL / ELECTRICAL

STATE OF OKLAHOMA
MICHAEL L. ABLA
2639
OKLAHOMA CITY, OKLAHOMA
REGISTERED ARCHITECT
9/27/23

CG
drawn by

MA
checked by

SEPTEMBER 2023
date

revisions

MOORE PUBLIC SCHOOLS
BOARD OF EDUCATION
MOORE, OKLAHOMA

MOORE Public Schools
LEARNING FOR LIFE

OFFICE ADDITION
FAIRVIEW
ELEMENTARY SCHOOL

sheet no:

A104

OWNERSHIP USE OF DOCUMENTS:

AGP EXPRESSLY RESERVES ITS COPYRIGHT AND OTHER PROPERTY RIGHTS OF ALL PLANS AND DRAWINGS DESIGNED AND/OR PRODUCED. PLANS AND DRAWINGS ARE NOT TO BE REPRODUCED IN ANY FORM OR MANNER WITHOUT THE EXPRESSED WRITTEN CONSENT OF AGP.