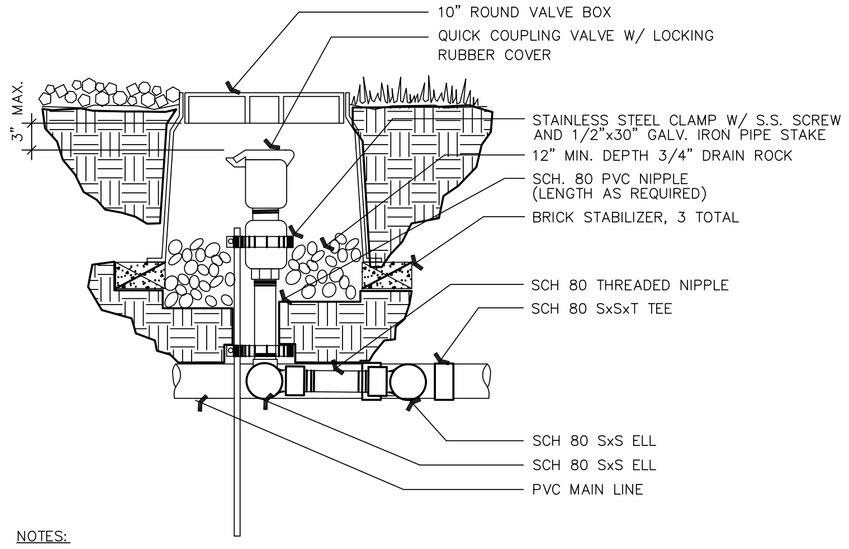

NOTES:
1. USE TEFLON PASTE PIPE THREAD SEALANT FOR THREADED CONNECTIONS

1 QUICK COUPLING VALVE DETAIL
NOT TO SCALE

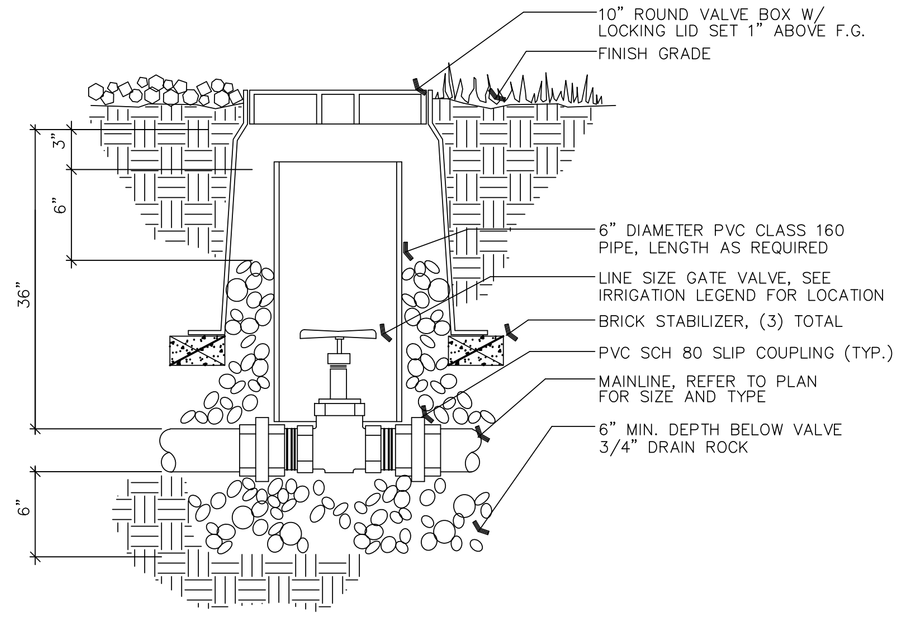

2 MANUAL SHUT-OFF GATE VALVE DETAIL
NOT TO SCALE

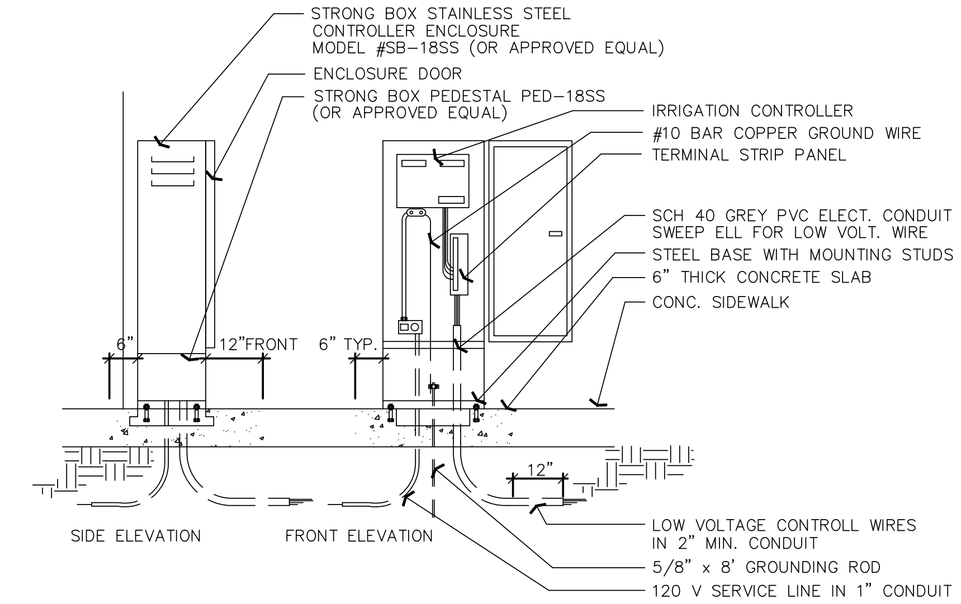

3 CONTROLLER DETAIL
NOT TO SCALE

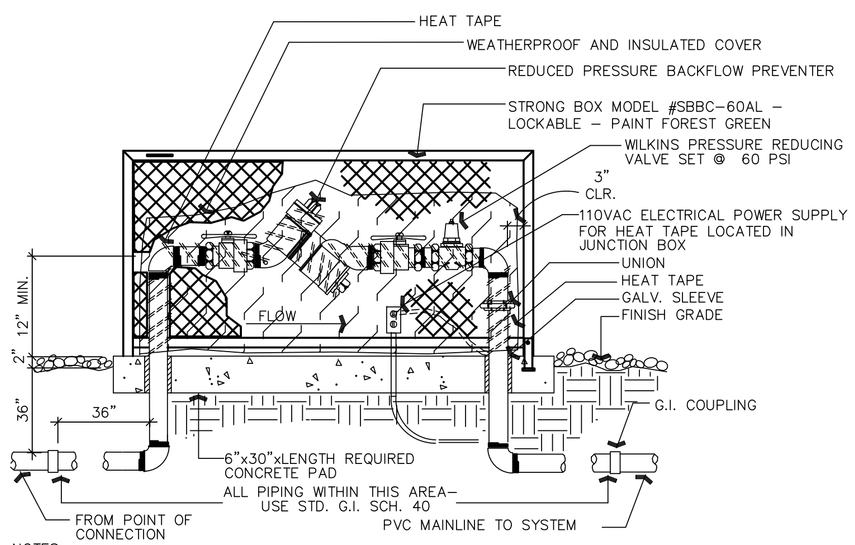

NOTES:
1. INSTALL 18" CLEAR FROM CURB, EDGE, ETC.
2. PAINT ALL ABOVE GRADE MATERIALS W/ 2 COATS RUSTOLEUM FLAT BLACK PAINT
3. WRAP ALL BELOW GRADE METAL PIPE W/ .010" x 2" P.E. TAPE.
4. USE TEFLON PASTE PIPE THREAD SEALANT FOR ALL THREADED CONNECTIONS.
5. WRAP ELECTRIC HEAT TAPE AROUND ALL EXPOSED PIPE
6. WRAP ENTIRE BACKFLOW PREVENTION DEVICE WITH WEATHERPROOF, INSULATED MATERIAL

4 BACKFLOW PREVENTER DETAIL
NOT TO SCALE

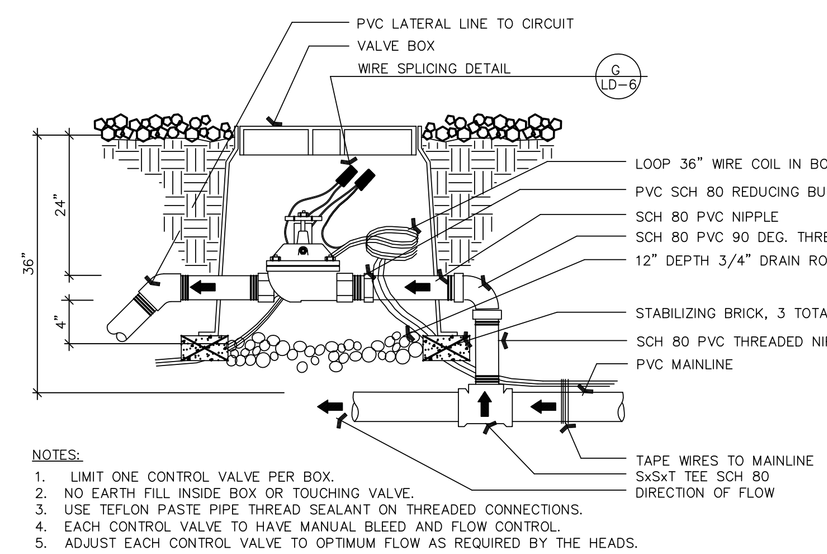

NOTES:
1. LIMIT ONE CONTROL VALVE PER BOX.
2. NO EARTH FILL INSIDE BOX OR TOUCHING VALVE.
3. USE TEFLON PASTE PIPE THREAD SEALANT ON THREADED CONNECTIONS.
4. EACH CONTROL VALVE TO HAVE MANUAL BLEED AND FLOW CONTROL.
5. ADJUST EACH CONTROL VALVE TO OPTIMUM FLOW AS REQUIRED BY THE HEADS.

5 ELECTRIC REMOTE CONTROLLED VALVE DETAIL
NOT TO SCALE

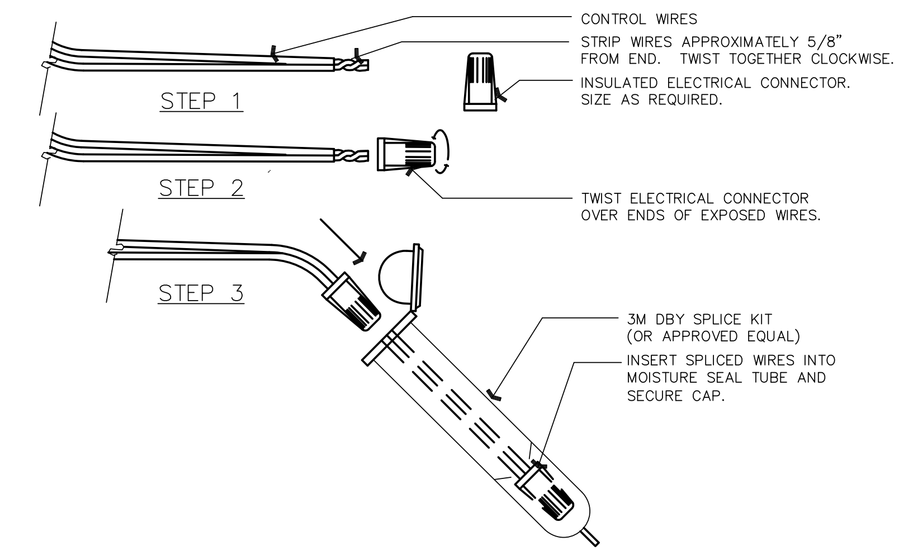

6 WIRE CONNECTION DETAIL
NOT TO SCALE

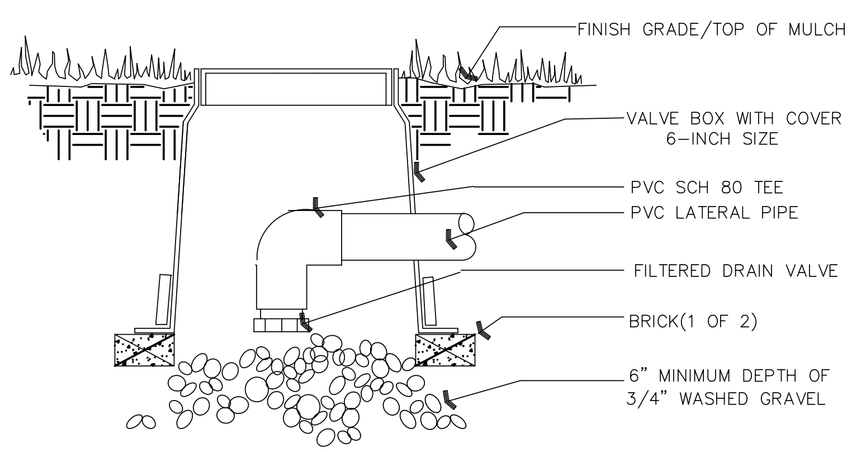

7 DRAIN VALVE DETAIL
NOT TO SCALE

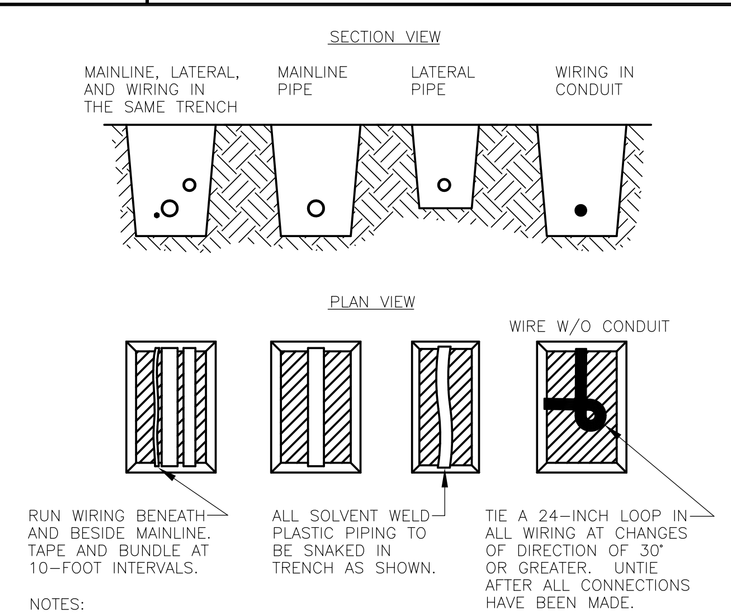

NOTES:
1. SLEEVE BELOW ALL HARDSCAPE ELEMENTS WITH CLASS 200 PVC TWICE THE DIAMETER OF THE PIPE OR WIRE BUNDLE WITHIN.
2. FOR PIPE AND WIRE BURIAL DEPTHS SEE SPECIFICATIONS.

8 JOINT IRRIGATION TRENCH DETAIL
NOT TO SCALE

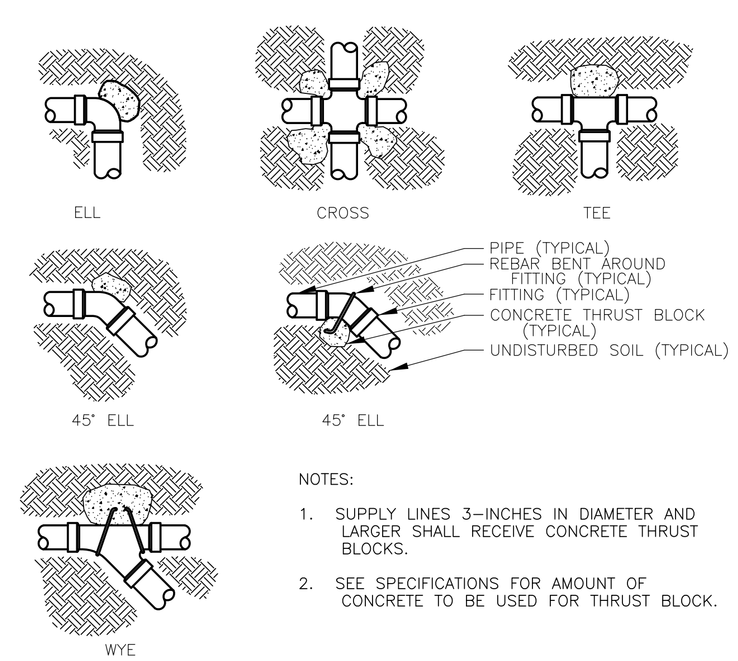

NOTES:
1. SUPPLY LINES 3-INCHES IN DIAMETER AND LARGER SHALL RECEIVE CONCRETE THRUST BLOCKS.
2. SEE SPECIFICATIONS FOR AMOUNT OF CONCRETE TO BE USED FOR THRUST BLOCK.

9 THRUST BLOCK DETAIL
NOT TO SCALE

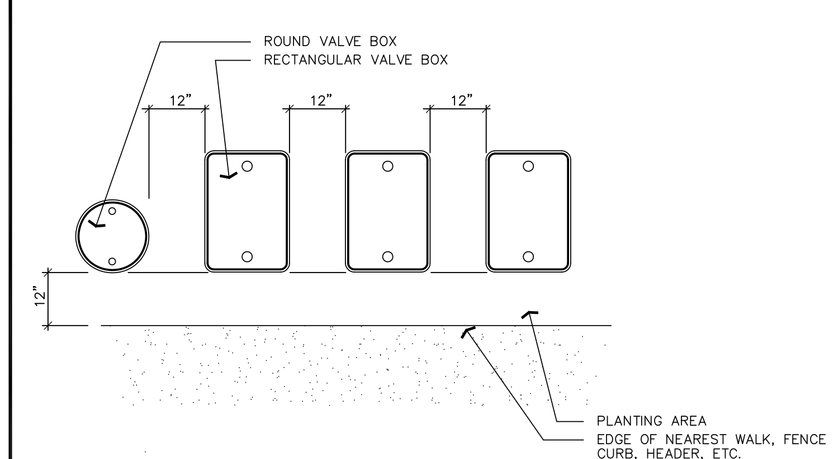

NOTES:
1. SET BOXES PARALLEL AND PERPENDICULAR TO NEAREST EDGE AND EACH OTHER.
2. CENTER BOXES OVER ENCLOSED VALVES.
3. AVOID HEAVILY COMPACTING SOIL AROUND BOXES TO PREVENT DAMAGING BOX.

10 VALVE BOX LAYOUT DETAIL
NOT TO SCALE

AGP
the Abla Griffin Partnership L.L.C.

313 S. E. 5th Street
MOORE, OK. 73160
405.735.3477
AGP@theAGP.net
www.theAGP.net

CEDAR CREEK
CIVIL

KFC ENGINEERING
STRUCTURAL

SALAS O'BRIEN
MECHANICAL / ELECTRICAL

STATE OF OKLAHOMA
MICHAEL L. ABLA
2639
OKLAHOMA CITY, OKLAHOMA
LICENSED PROFESSIONAL ENGINEER
4/25/25

CG
drawn by

MA
checked by

APRIL 2025
date

revisions

MOORE PUBLIC SCHOOLS

MOORE PUBLIC SCHOOLS
BOARD OF EDUCATION
MOORE, OKLAHOMA

CLASSROOM ADDITION
CENTRAL JUNIOR
HIGH SCHOOL

sheet no:

L102

IRRIGATION DETAILS

OWNERSHIP USE OF DOCUMENTS:

AGP EXPRESSLY RESERVES ITS COPYRIGHT AND OTHER PROPERTY RIGHTS OF ALL PLANS AND DRAWINGS DESIGNED AND/OR PRODUCED. PLANS AND DRAWINGS ARE NOT TO BE REPRODUCED IN ANY FORM OR MANNER WITHOUT THE EXPRESSED WRITTEN CONSENT OF AGP.