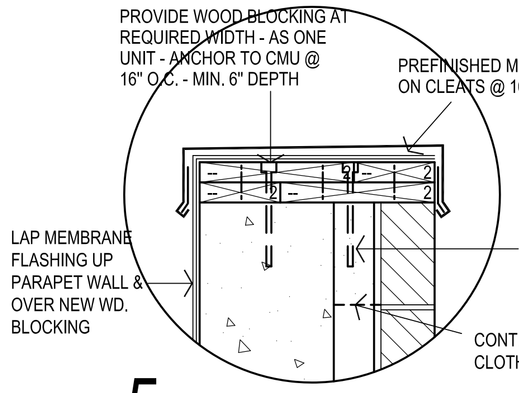

5

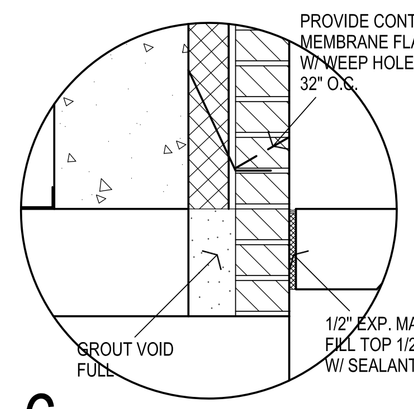

6

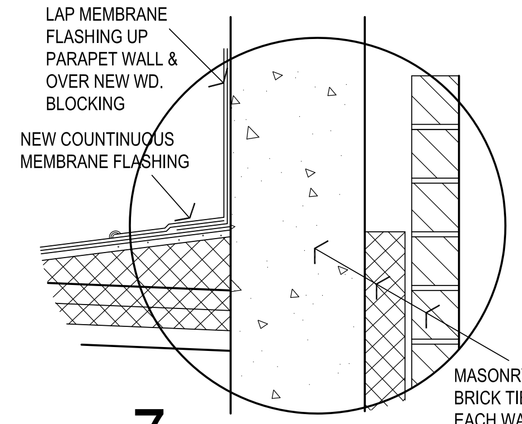

7

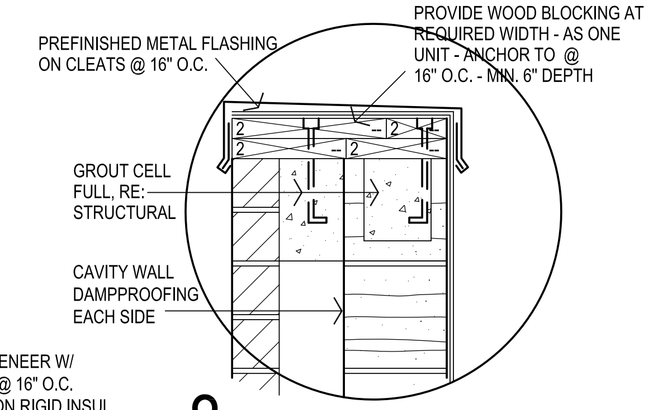

8

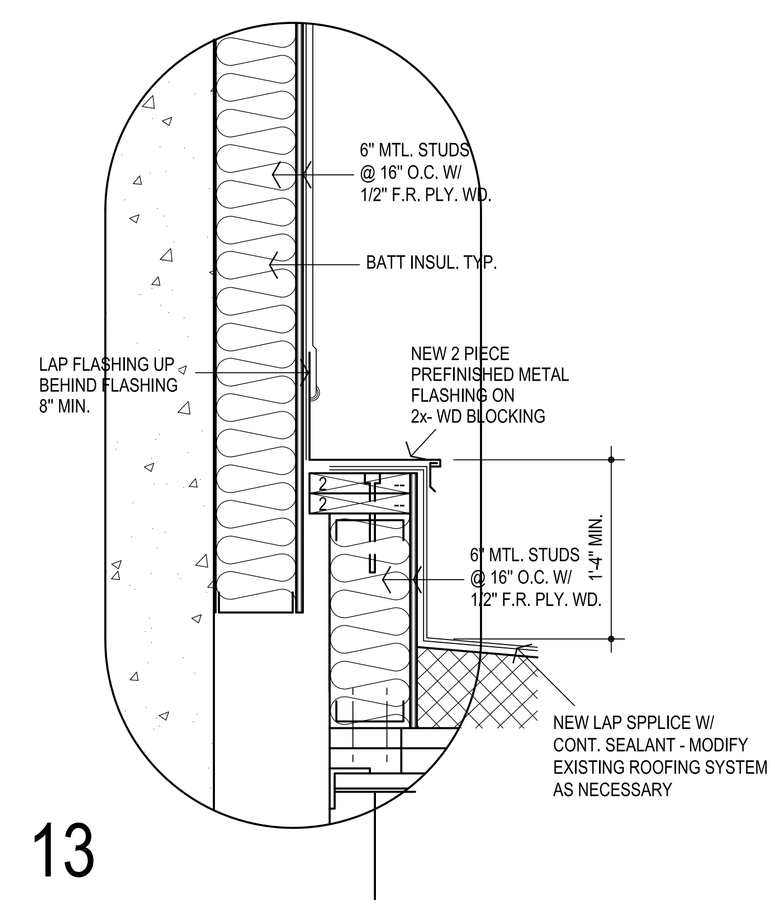

13

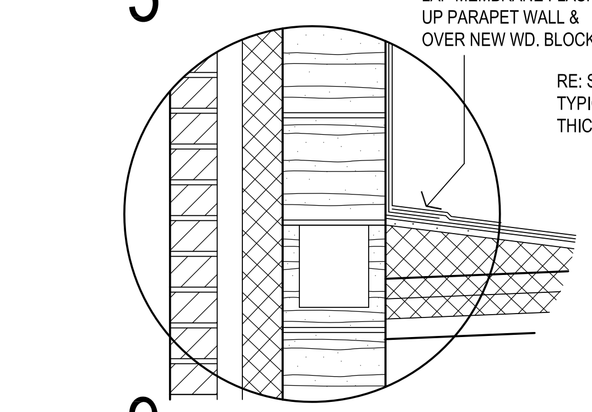

9

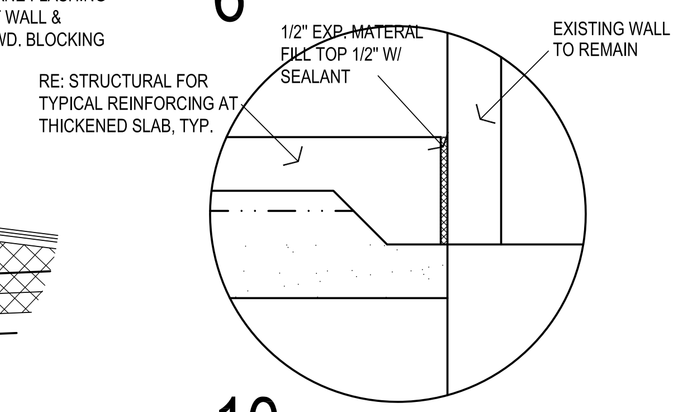

10

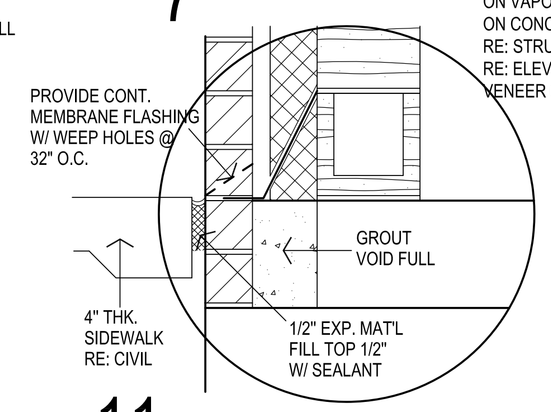

11

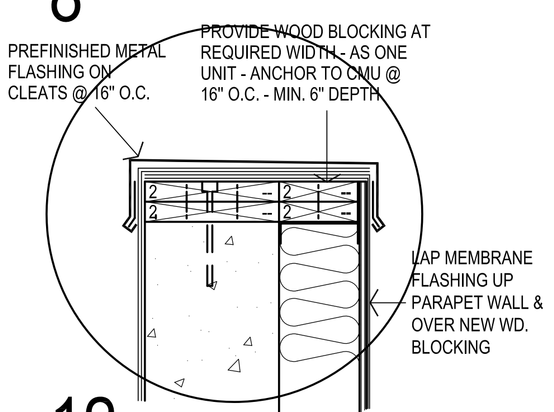

12

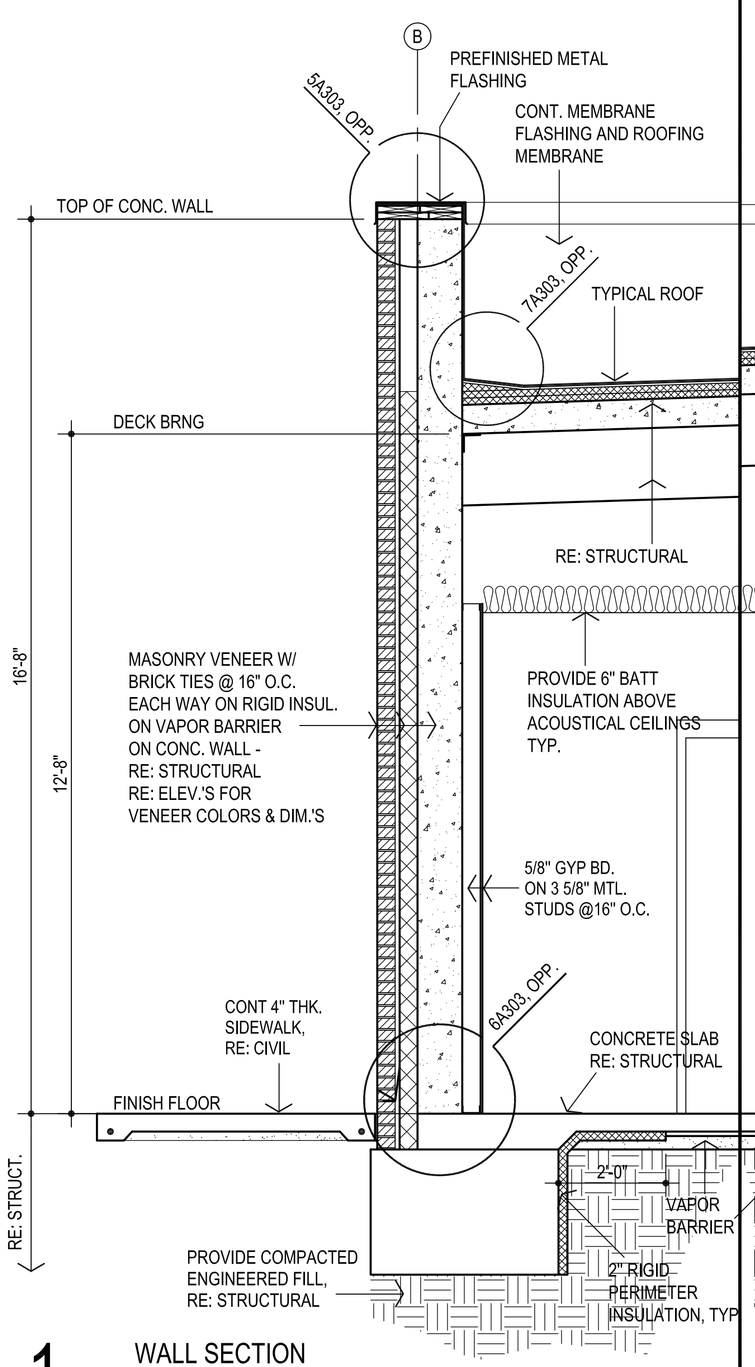

1 WALL SECTION
1/2" = 1'-0"

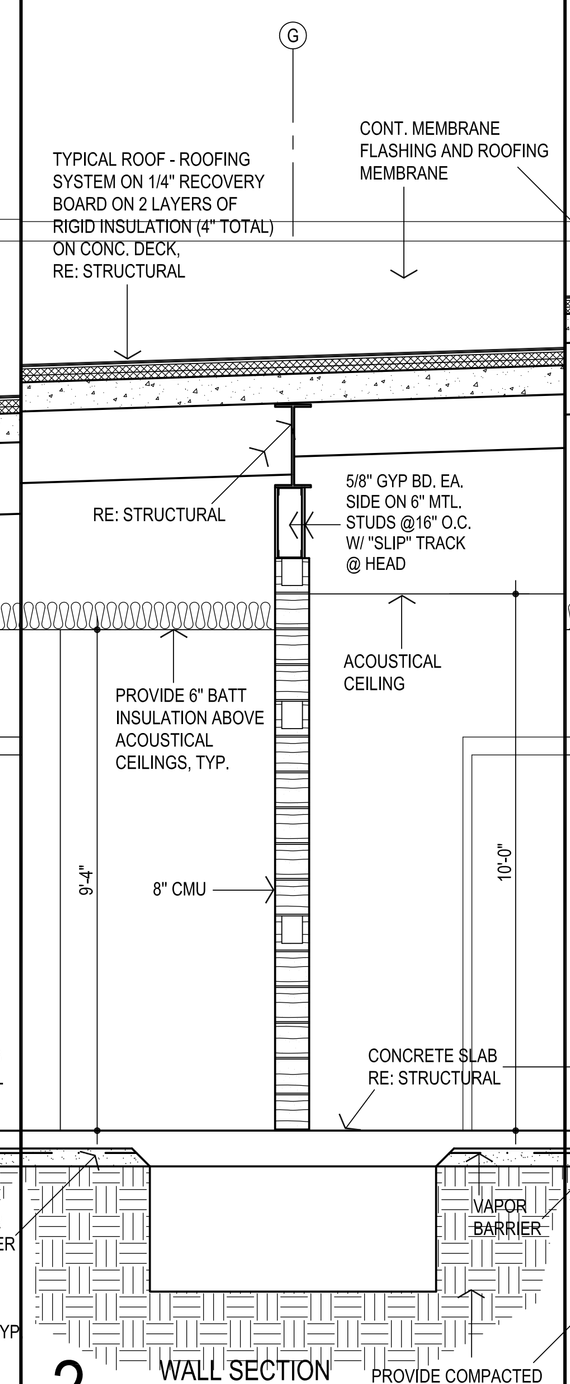

2 WALL SECTION
1/2" = 1'-0"

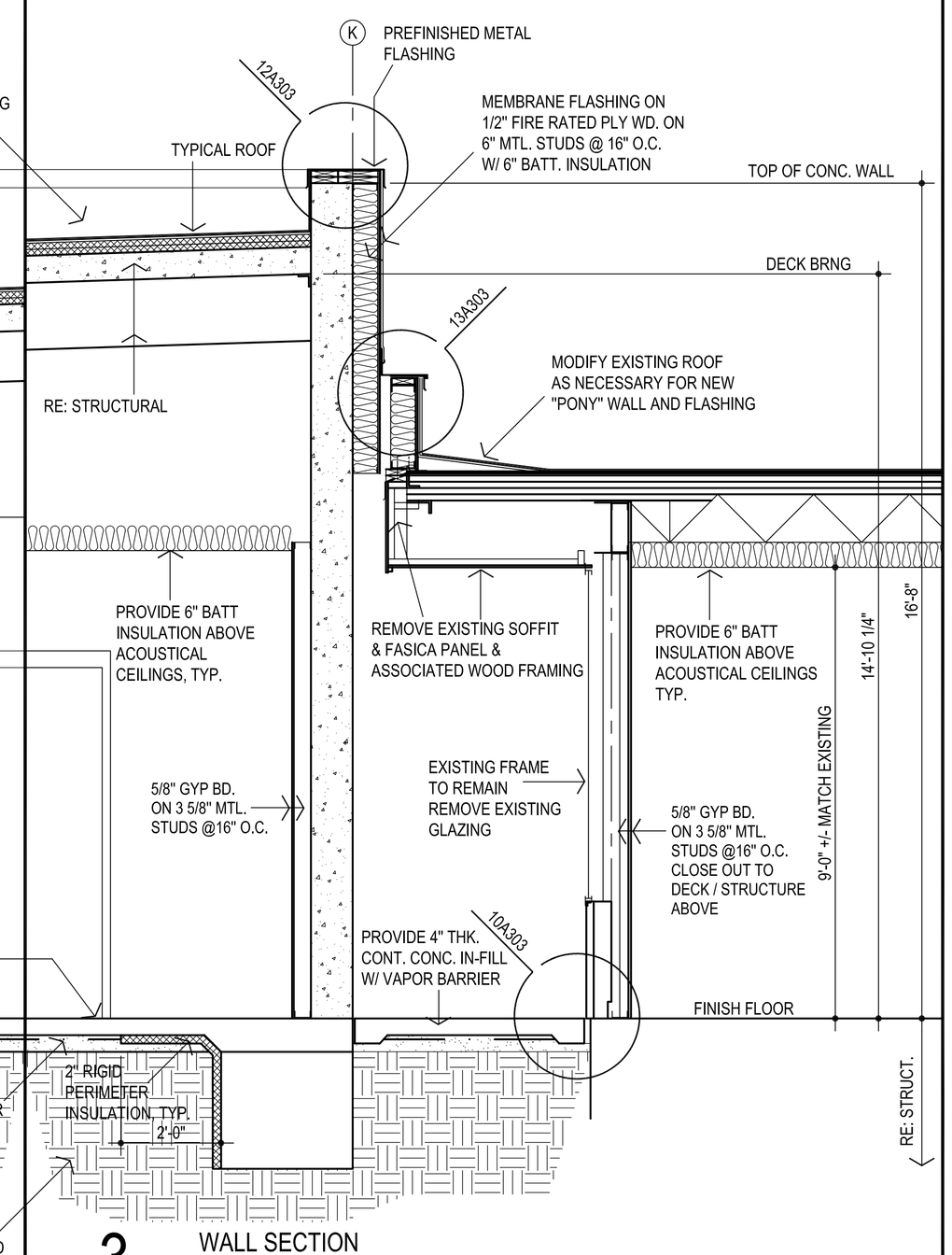

3 WALL SECTION
1/2" = 1'-0"

GENERAL NOTES:

1. REFER STRUCTURAL DRAWINGS FOR TOP OF FOOTING ELEVATIONS - PROVIDE ALL MATERIALS REQUIRED FOR WALL SYSTEM TO EXTEND TO TOP OF FOOTING
2. DO NOT SCALE DRAWINGS TO OBTAIN MATERIAL QUANTITIES. USE DRAWINGS WHICH ARE DIMENSIONED OR COORDINATE W/ EXISTING CONDITIONS &/OR ARCHITECT & ENGINEERS.

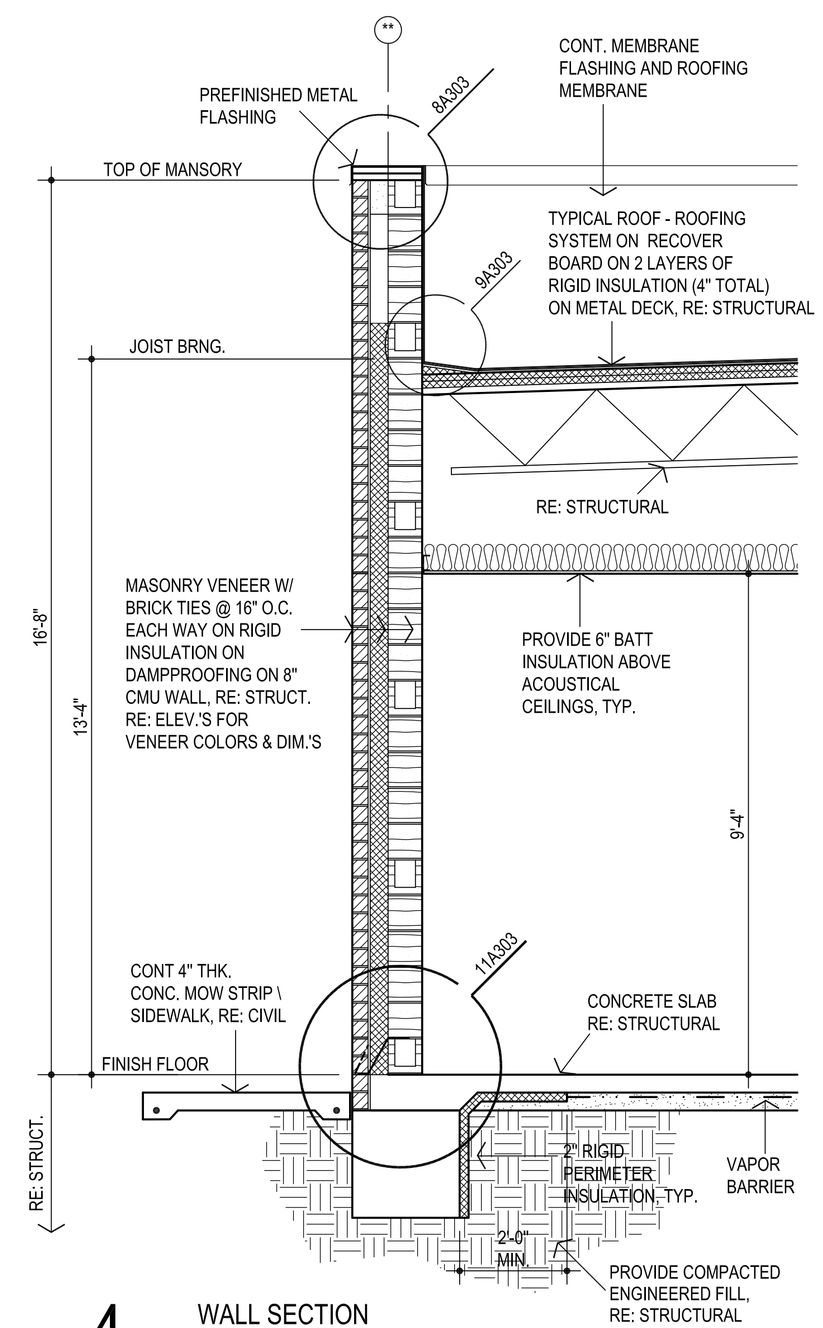

4 WALL SECTION
1/2" = 1'-0"

AGP
the Abla Griffin Partnership L.L.C.

313 S. E. 5th Street
MOORE, OK. 73160
405.735.3477
AGP@theAGP.net
www.theAGP.net

CEDAR CREEK
CIVIL

KFC ENGINEERING
STRUCTURAL

SALAS O'BRIEN
MECHANICAL / ELECTRICAL

STATE OF OKLAHOMA
MICHAEL L. ABLA
2639
OKLAHOMA CITY, OKLAHOMA
LICENSED ARCHITECT

4/25/25

CG
drawn by

MA
checked by

APRIL 2025
date

revisions

MOORE PUBLIC SCHOOLS

MOORE PUBLIC SCHOOLS
BOARD OF EDUCATION
MOORE, OKLAHOMA

CLASSROOM ADDITION
CENTRAL JUNIOR
HIGH SCHOOL

sheet no:

A303

SECTIONS

OWNERSHIP USE OF DOCUMENTS:

AGP EXPRESSLY RESERVES ITS COPYRIGHT AND OTHER PROPERTY RIGHTS OF ALL PLANS AND DRAWINGS DESIGNED AND/OR PRODUCED. PLANS AND DRAWINGS ARE NOT TO BE REPRODUCED IN ANY FORM OR MANNER WITHOUT THE EXPRESSED WRITTEN CONSENT OF AGP.